RETRAX
RETRACTABLE BED COVERS

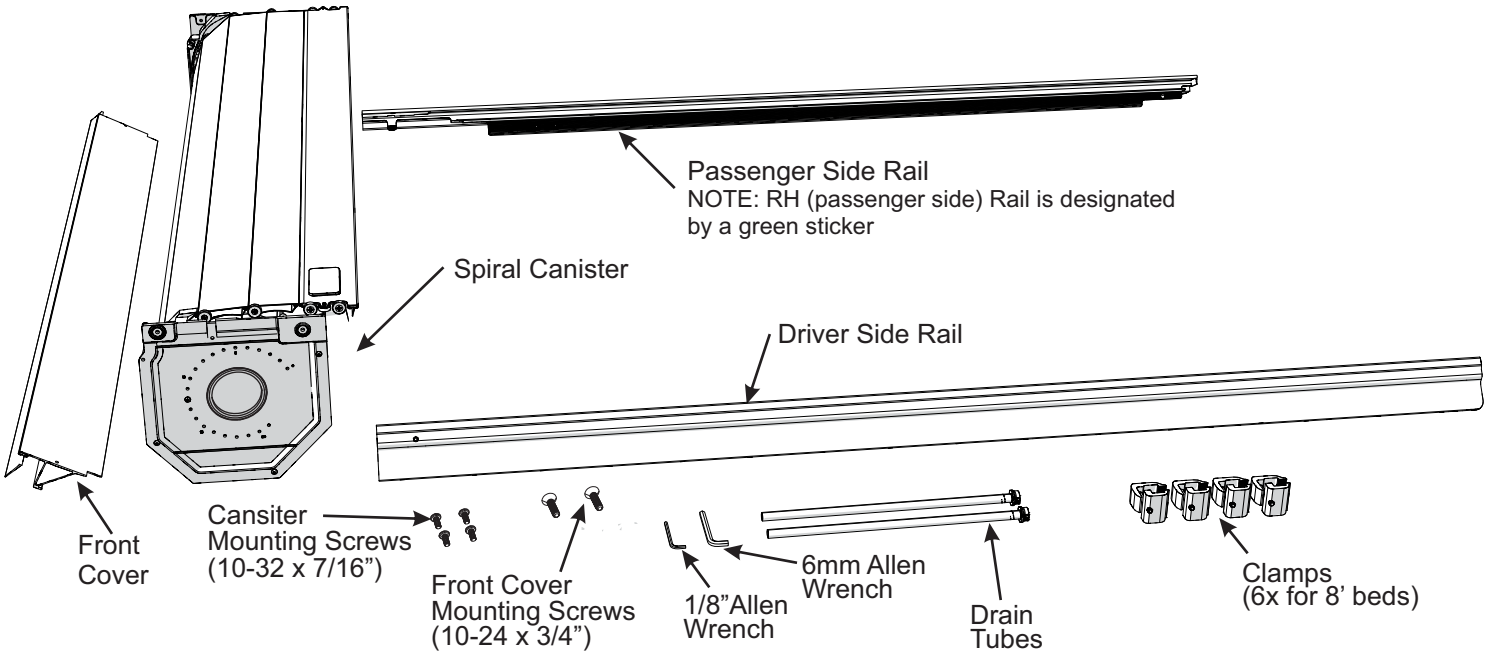

Table of Contents

NOTE: Some models require specific steps and parts. Please check below. If your model is listed, follow the instructions on that page!

Pg. 1	Exploded view, pre-assembly guidelines parts check lists, box contents, tools required
Pg. 2	Steps 1 - 3, Cover assembly
Pg. 3	Steps 4 & 5, Position cover and clamp installation
Pg. 4	XR 8ft bed clamp assembly; Step 5 Alternate, XR Rail system clamp installation
Pg. 5	Steps 6- 8, Measurements and adjustments
Pg. 6	Step 9, Install drain tubes; and Final notes
Pg. 7	Rack system installation
Pg. 8	Cover Use & Maintenance
Pg. 9-10	PowerTrax
Pg. 11-12	Dodge Ram Box 2009 - 2018 and Classic 2019
Pg. 13	Dodge RamBox 2019-up
Pg. 14-16	Honda Ridgeline 2006 - 2015
Pg. 17	Honda Ridgeline 2017-up
Pg. 18	Nissan Frontier 2005-up
Pg. 19	Nissan Titan 2004-up
Pg. 20	Toyota Tacoma 2005 - 2015
Pg. 21-23	Toyota Tacoma 2016-up
Pg. 24	Toyota Tundra 2007-up w/Deck rail system
Pg. 25-26	Ford Ranger 2019-up
Pg. 27	Chevy/GMC 1500 2019-up
Pg. 28	Nissan Navara 2021-up
Pg. 29	Warranty Statement
Pg. 30	Warranty Statement, Claim Procedure, Serial Number location

Pre-assembly Guidelines

Please read all instructions before assembling the bed cover.
Keep the boxes and packaging until the installation is complete. Unpack carefully to prevent scratching.
DO NOT remove any protective films from the cover and canister until after the installation is complete.
DO NOT USE A LUBRICANT OR LOCTITE BRAND PRODUCTS ON THE ROLLING COVER.
USE OF THESE WILL VOID THE WARRANTY.

See the Maintenance page for proper care.

Parts check list for rail box

- Driver Side Rail
- Passenger Side Rail
- Clamp Kit

Parts check list for large box

- Instruction packet
- Cover rolled into canister spiral assembly
- Front cover for canister
- Keys (Key Fobs if PowerTrax cover)
- Drain tubes (2)

Clamp Kit

- Clamps (4) (6 for 8' bed)
- Front Cover Mounting Screws (2)
- Canister Mounting Screws (4)
- Allen Wrenches- 1/8" and 6mm

Tools Required

- #2 Philips Screwdriver
- 9/16" or 1/2" Wrench (ratchet preferred)
- Pliers or locking pliers

STEP 1: Remove Shipping Materials

Remove the screws, shipping brackets and the white shipping tubes from both sides.

Retain a shipping bracket for later use as a shim.

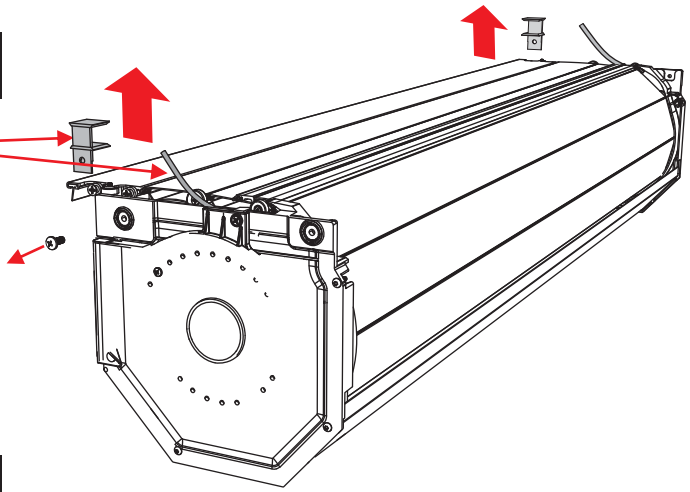

STEP 2: Install the rails to the canister

2a. Lift up the lock cover and open lock by pressing the release button. Pull cover out of the canister 6 to 8 inches, holding it from rolling back in, guide the cover into the rail channel while positioning the rails into the canister. Align the front and rear rail attachment tabs and holes to the inside of the corresponding canister holes.

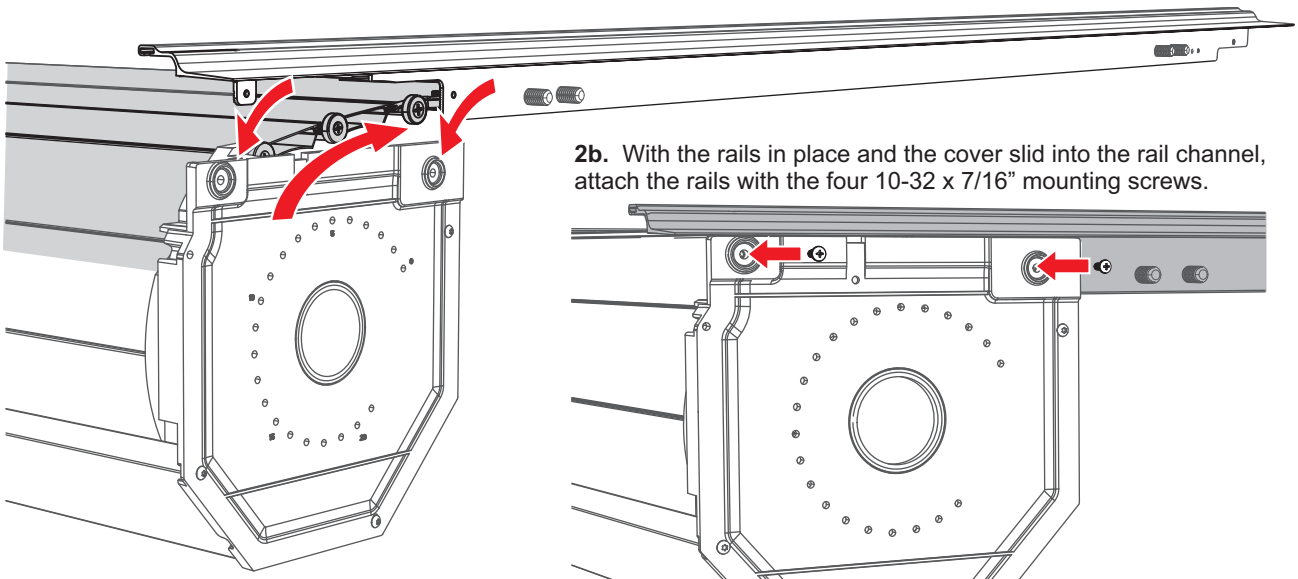

2b. With the rails in place and the cover slid into the rail channel, attach the rails with the four 10-32 x 7/16" mounting screws.

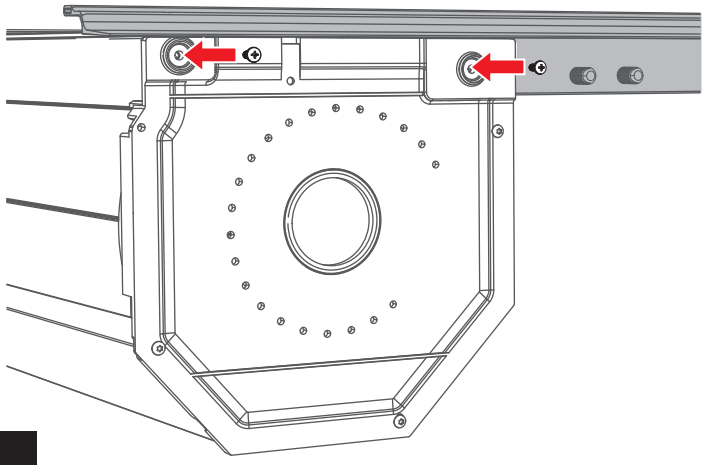

STEP 3: Install the front cover

Slide the front cover under the rails, attaching it with the two 10-24 x 3/4" screws and the Allen wrench. The front cover attaches through the top of the rail.

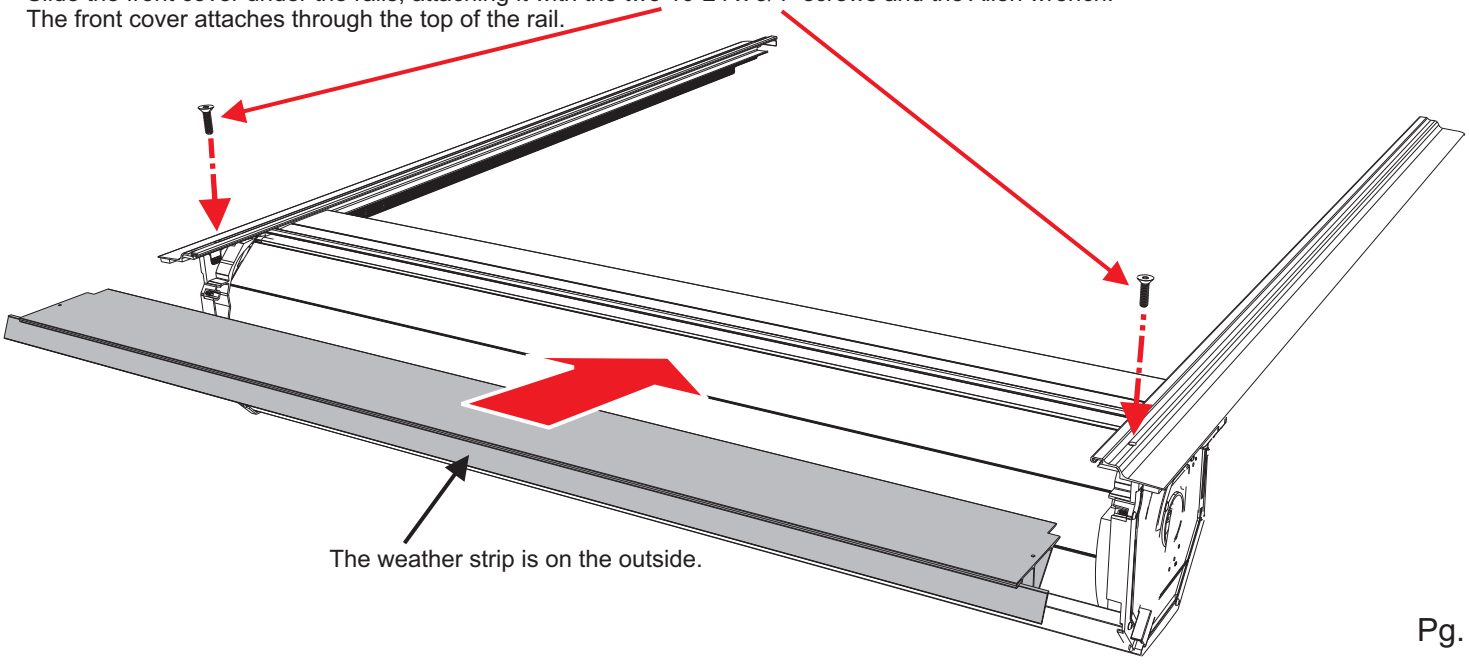

STEP 4: Position the cover assembly onto the truck and position the rails.

NOTE: Prior to installing the cover, some drop-in style bed liners may need to be notched in the front/cab end corners to provide clearance for the cover canister.

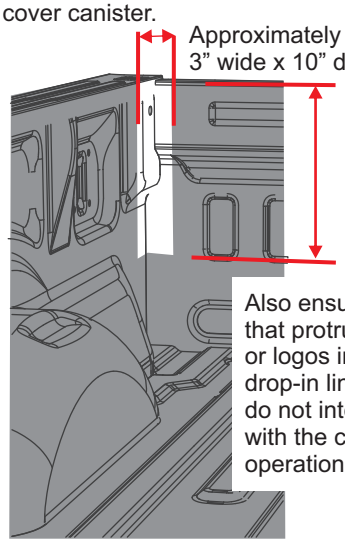

4a. With two people, lift the cover and place it onto the truck bed starting by placing the canister portion near the bulkhead.
The font seal of the cover should lay forward and lay flat.

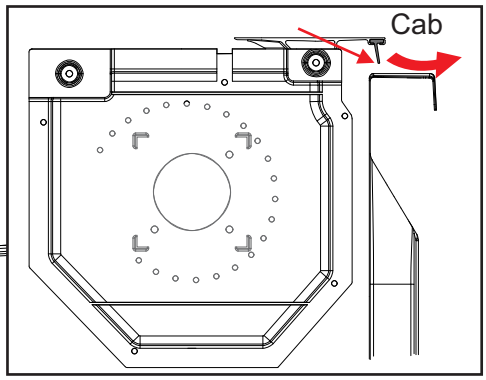

4b. Move the cover back toward the tailgate and use the shipping bracket as a spacer to position both rails to be 1/8” from the tailgate.

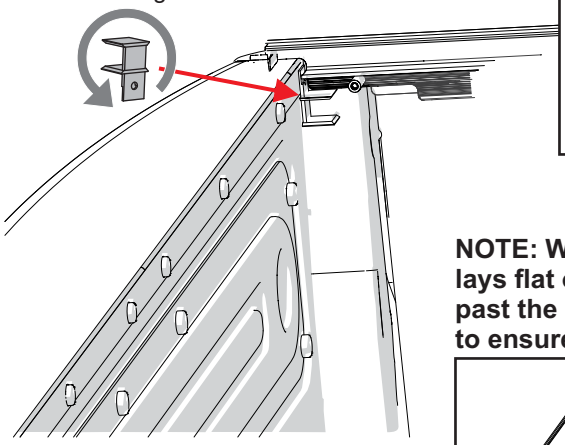

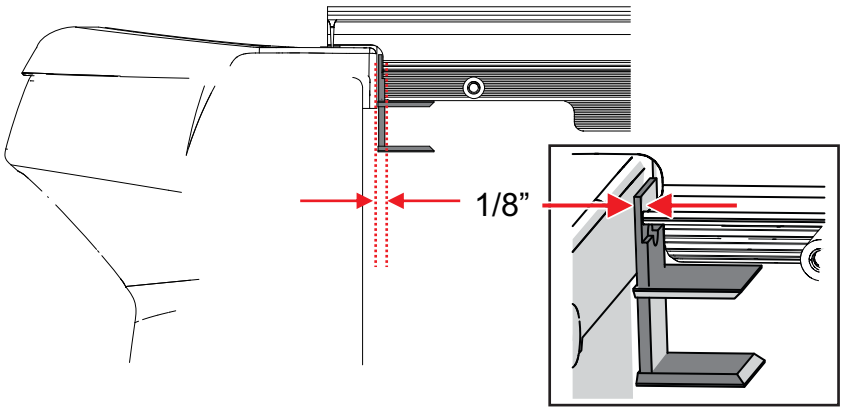

NOTE: With the cover in place, the front seal lays flat on the bulkhead, but must not extend past the bed rail cap. Trim the seal as needed to ensure that it lays flat.

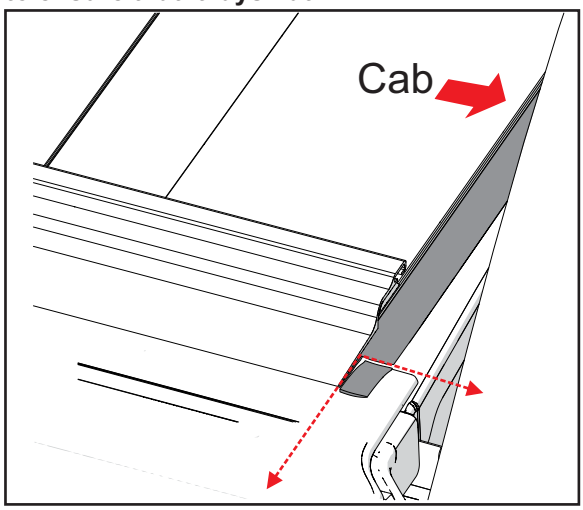

STEP 5: Install the front and rear clamps

STEP 5 Alternate: Install the front and rear clamps specific to the XR Rail system- go to Page 4. For the Ford Ranger refer to Page 26.

Position the clamps between the adjustment screws. Using a 9/16” or 1/2” wrench (depending on your clamps), tighten the clamps. It is important to push down on the rail while tightening, AND to tilt the rail up approximately 2 degrees simultaneously. Both the pushing down and tilting of the rail will position the rail best to minimize water intrusion.

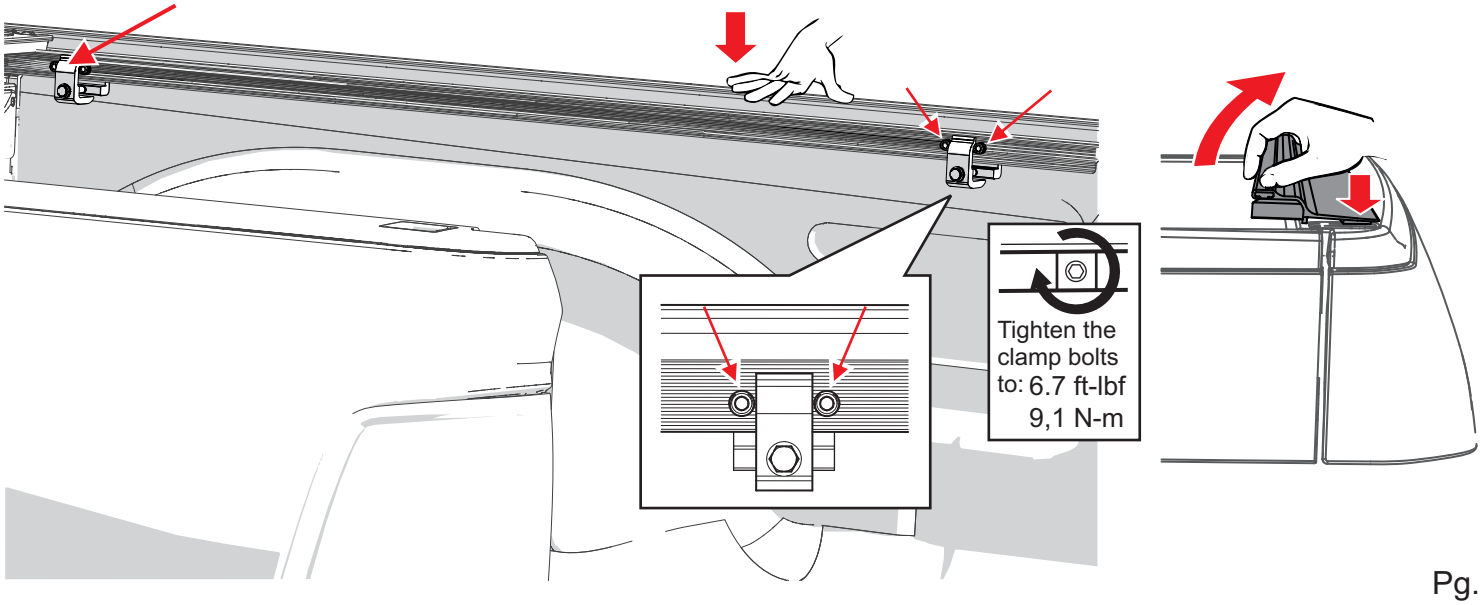

STEP 5 Alternate: XR Rail system clamp installation.

XR 8ft bed clamp assembly

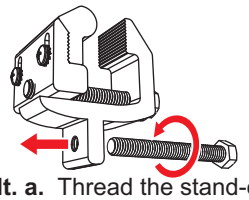

5 Alt. a. Thread the stand-off bolt into the lower flange of the clamp.

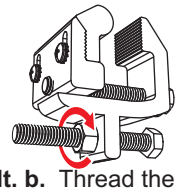

5 Alt. b. Thread the stand-off jam nut onto the bolt.

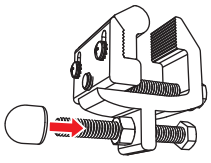

5 Alt. c. Slide the stand-off bumper onto the bolt.

5 Alt. d. The adjustable-back clamp is designed and tested for the extra loads for the retractable cover with the rail system. The adjustable-back clamps must be positioned correctly under the truck bed rail to properly carry the extra loads.

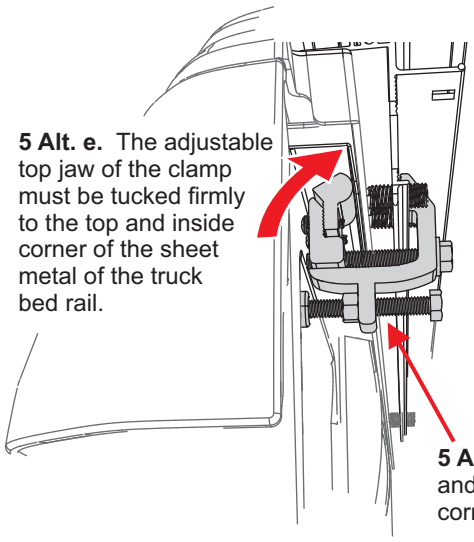

5 Alt. e. The adjustable top jaw of the clamp must be tucked firmly to the top and inside corner of the sheet metal of the truck bed rail.

5 Atl. f. If the jaw does not contact firmly into the corner of the bed flange, remove the clamp and loosen the screws to adjust the jaw.

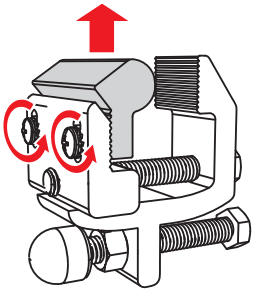

Re-tighten screws and fully engage the lock washers. *Always make sure the two sets of teeth are fully engaged.*

5 Alt. g. Replace the clamp between the adjustment screws and recheck to make sure the jaw seats firmly into the corner of the truck bed rail.

Position the clamps between the leveling screws both front and back. Using a 9/16" wrench, tighten the clamps. It is important to push down on the rail while tightening, AND to tilt the rail up approximately 2 degrees simultaneously. Both the pushing down and tilting of the rail will position the rail best to minimize water intrusion.

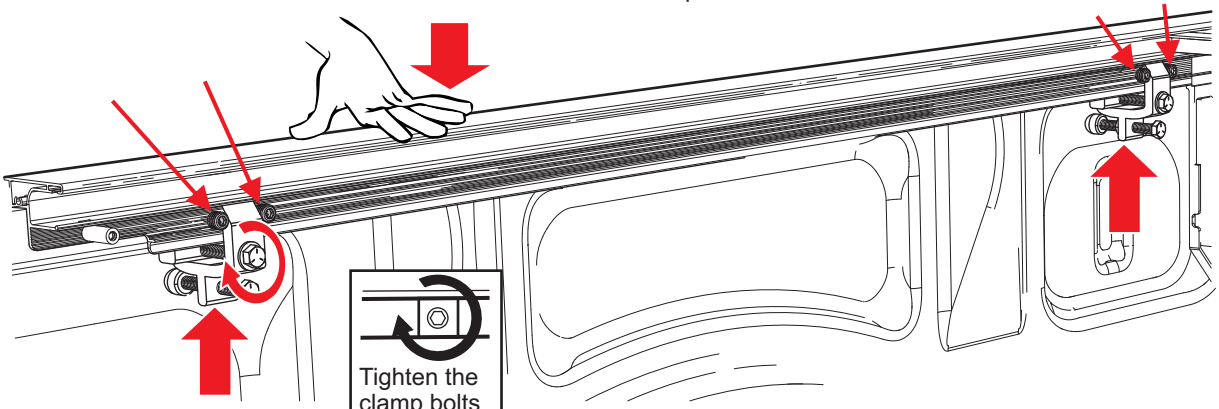

Tighten the clamp bolts to: 6.7 ft-lbf 9,1 N-m

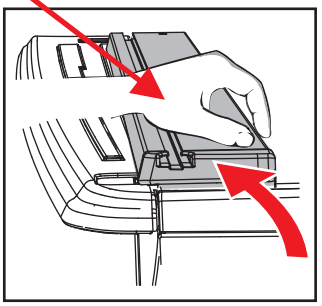

5 Atl. h. Tightening the rail clamp stand-off bolt.

From Steps 6, 7 & 8 the rails are now adjusted to be even.

Loosen the jam nut, then tighten the stand-off bolt until the bumper firmly contacts the truck bed wall. Re-tighten the jam nut *Do Not over torque the bolt.*

Tighten the **jam nuts** to: 6.7 ft-lbf 9,1 N-m

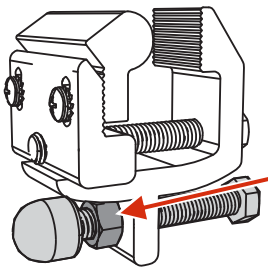

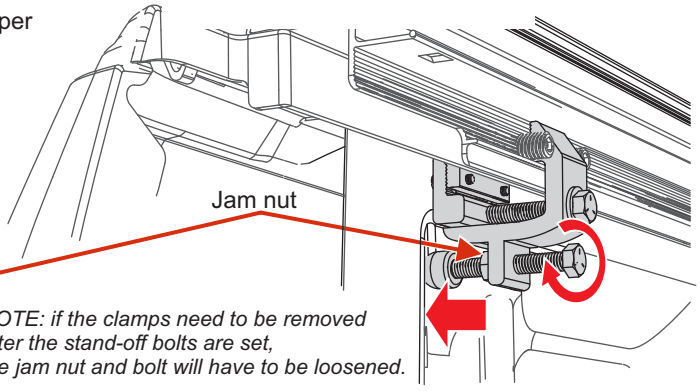

NOTE: if the clamps need to be removed after the stand-off bolts are set, the jam nut and bolt will have to be loosened.

NOTE: Due to variations in vehicle designs, the clamps may fit differently on your truck than on our test vehicles. Retrax is not responsible for cover-to-vehicle installations, nor is Retrax liable for an damages resulting from attachment, installation, or use.

STEP 6: Measure and record the distance between the rails.

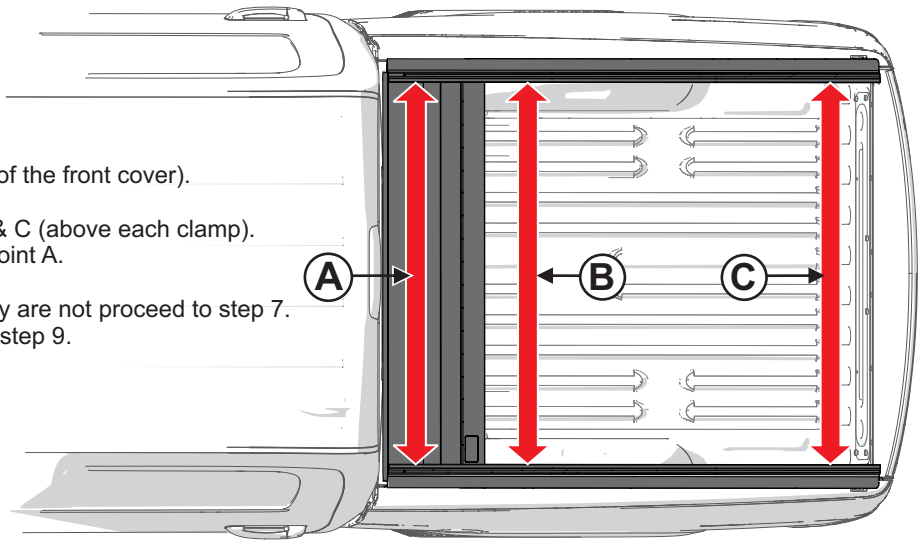

6a. Measure the distance at point A (on top of the front cover).

6b. Then measure the distance at points B & C (above each clamp).
They must measure the same ±1/16” as at point A.

6c. It is important the rails are parallel, if they are not proceed to step 7.
If the measurements are correct, proceed to step 9.

STEP 7: Adjust the distance between the rails.

Remove the clamp and turn the white adjustment screws with the 6mm Allen wrench to move the rails.
one complete turn = 1/16”. Turn both screws.

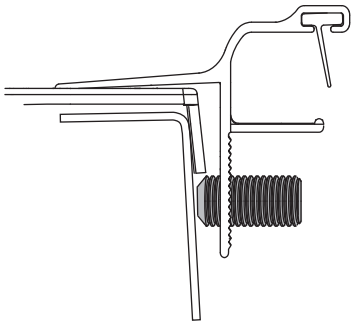

If the rails measured to be too close together,
turn the screws counter clockwise.

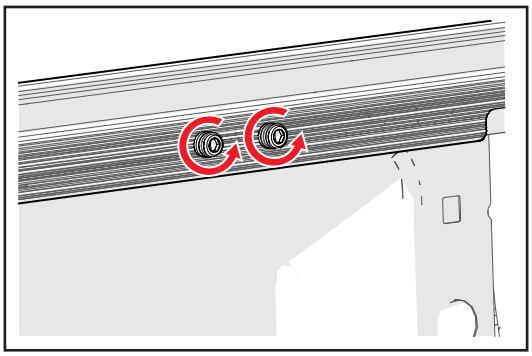

If the rails measured to be too far apart,
turn the screws clockwise.

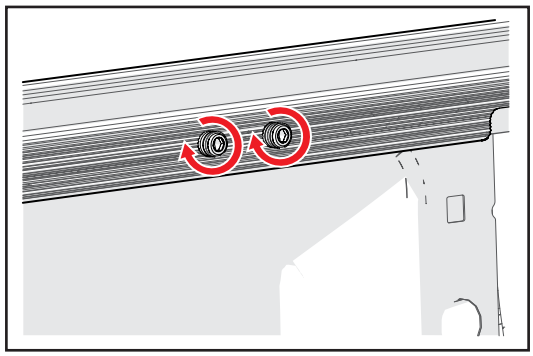

When properly adjusted, replace the clamp as in step 5.

STEP 8: Check for proper fit between the front cover and the rolling cover.

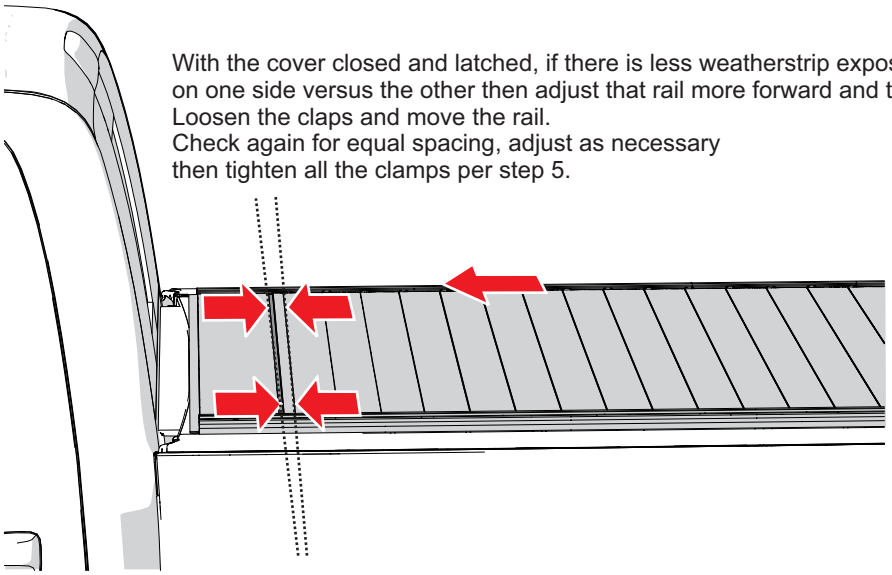

With the cover closed and latched, if there is less weatherstrip exposed
on one side versus the other then adjust that rail more forward and toward the cab.
Loosen the claps and move the rail.
Check again for equal spacing, adjust as necessary
then tighten all the clamps per step 5.

STEP 9: Remove the protective film and install the drain tubes.

9a. Remove all of the protective plastic film from the canister.

9b. Insert the drain tube into the canister on both sides, rotate to the right, clockwise, the fitting will click twice when secure.

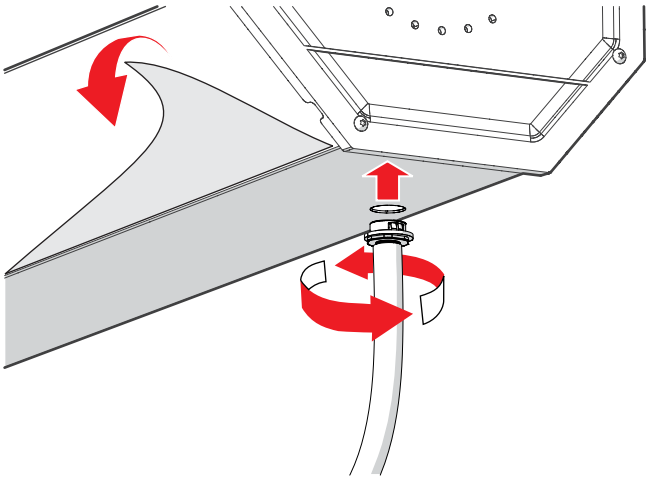

9c. Generally the drain tubes will be routed out through a hole drilled in the factory bed plug. Otherwise a suitable existing hole must be utilized. Or a new hole can be drilled, **taking great caution to be aware of lines and anything behind where the hole is drilled.**

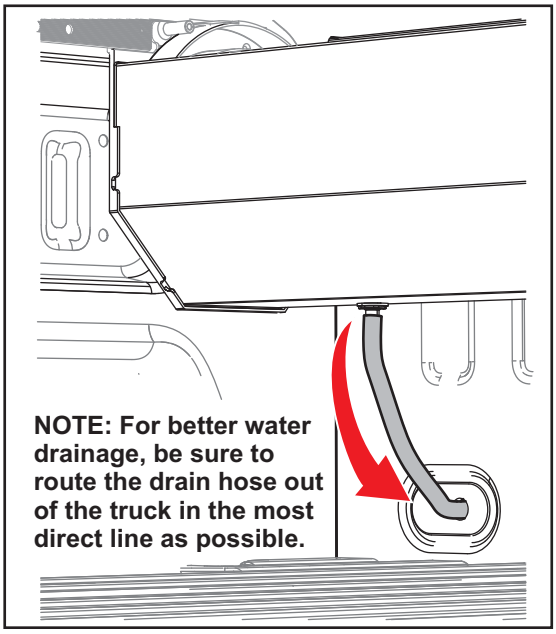

Final notes

- Open and close the cover to ensure that it is rolling without rubbing or binding.
- Open and close the tailgate to check for proper movement.
- On some models, a better fit with the tailgate may be obtained if the rear of the rails are adjusted slightly up or down.
- Remove all remaining protective plastic film.
- Recheck that all of the clamps are tight. ***Do this periodically throughout the use of the cover.***
- Check that the rails are level and spaced evenly, and adjust accordingly.

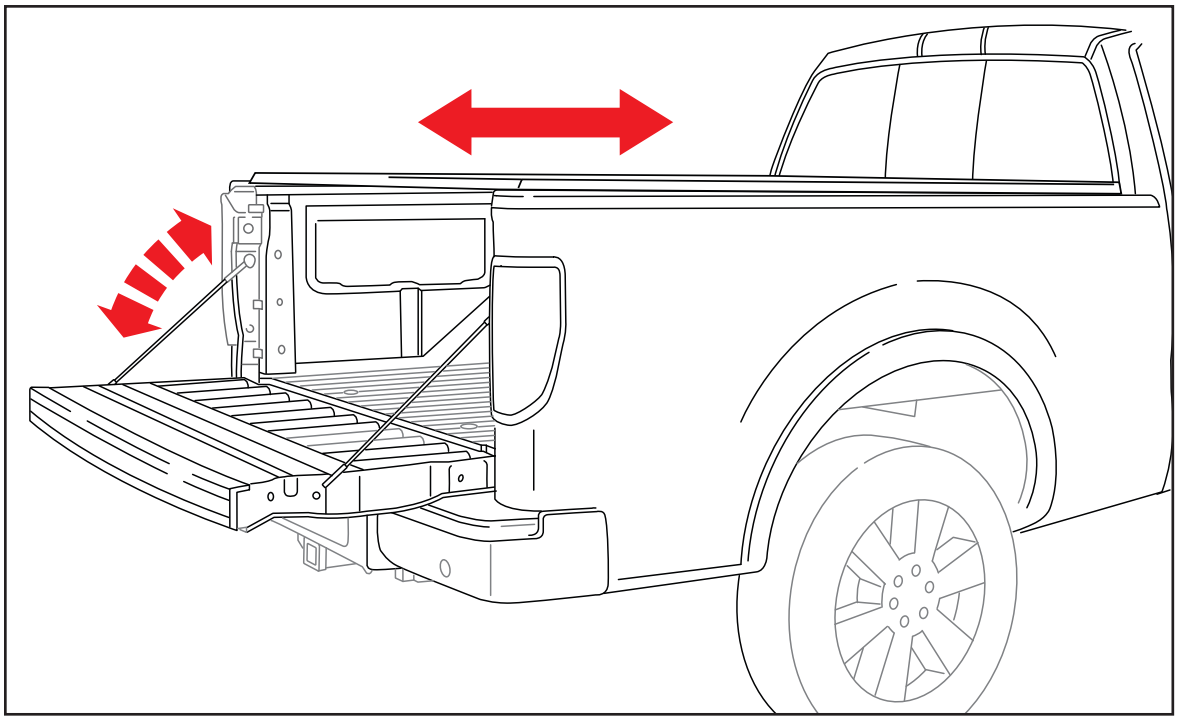

XR Trax Rail System Only - Rack System Installation Information

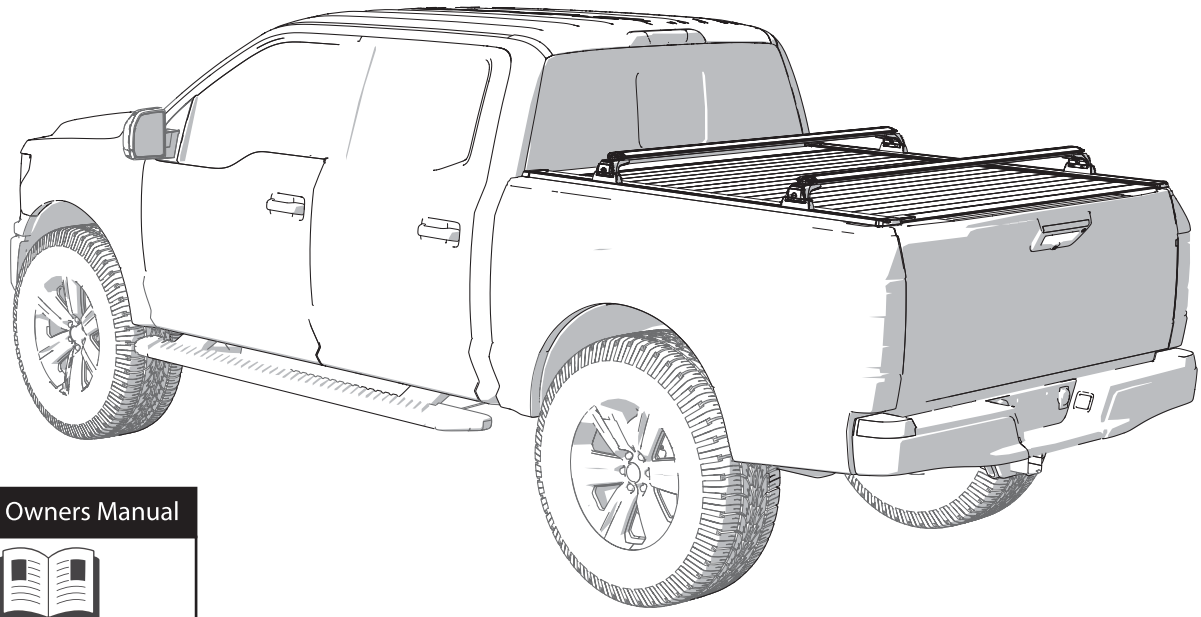

Truck Owners Manual

Be sure to refer to the truck owners manual for load ratings for the truck. When calculating weight of cargo, be sure to include occupants and the Retrax cover.

Retrax cover with rack system= 125lbs.

Rack System

For installation instructions and load ratings for the rack system, refer to the rack system's manual.

Caution

To prevent damage or loss of cargo when driving, check to make sure cross bars and cargo are securely fastened. Loading cargo on the roof rack will make the vehicle's center of gravity higher. Avoid high speeds, sudden starts, sharp turns, sudden braking or abrupt maneuvers; otherwise it may result in a loss of control. If driving for a long distance, or on rough roads, or at high speeds, occasionally stop the vehicle and make sure the cargo remains in its place. Do not ever exceed the maximum vehicle capacity when loading the vehicle.

Cover Use and Maintenance

The cover has superior quality rail weatherstrips seals. These seals help to minimize water intrusion into the truck bed. The initial break-in period for the rail weatherstrip is approximately 48 hours while in the fully closed position. Your cover may be sightly harder to open and close during this break-in period.

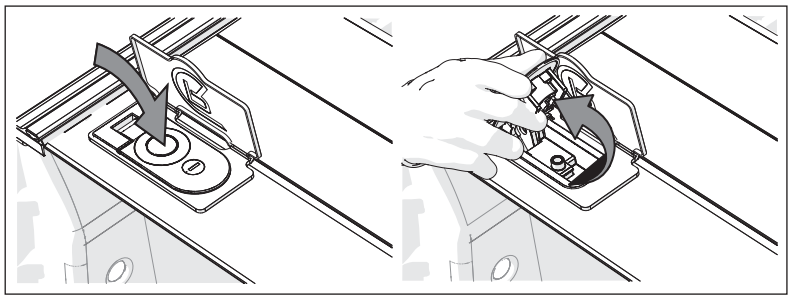

USE

Opening and using the cover

To use your cover, open the lock cover and press the button at the center of the latch to pop open the handle.

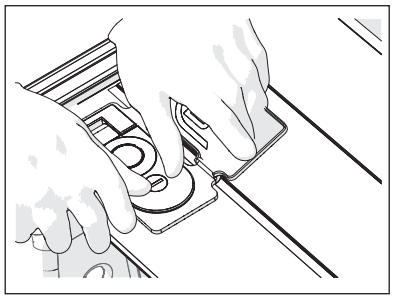

Closing and locking the cover

To latch your cover anywhere along the rail, push down firmly on the end of the lock handle.
Insert the key and turn until it is locked or unlocked.

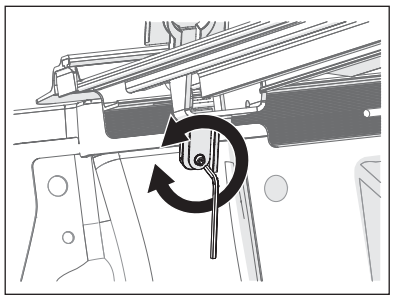

Lock cover adjustment

A 3/32" Allen wrench can be used to adjust the pointed set-screw on the lock arm. Turn clockwise additional latching pressure on the rail, or turn counter-clockwise if the lock is too hard to close.

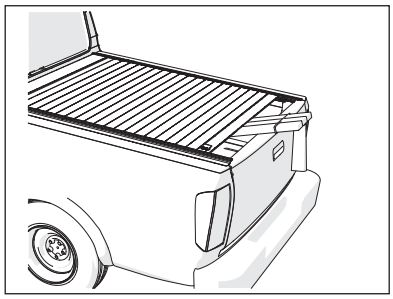

Securing loose cargo

Retractable covers help in transporting loose and large cargo, a unique feature that most bed covers cannot claim. NOTE: Cargo should still be secured to the truck bed to prevent it from coming loose.
To help secure any item too big to fit under the cover, latch the lock handle shut against the item to help keep it in place.

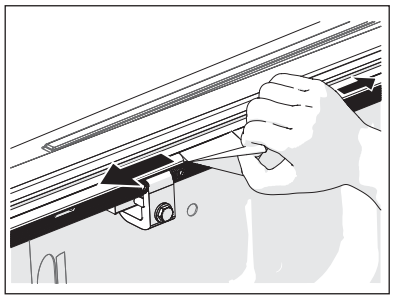

MAINTENANCE & CARE

Cleaning and caring for your cover.
You can wash the cover, but do not use any cleaners, protectants or strong chemicals.
The cover should be cleaned with mild soap and water.
Do not allow gasoline to come in contact with the cover.

The weather striping may absorb soapy residue from a car wash, it is recommended to wipe down the inside of the rails from time to time.

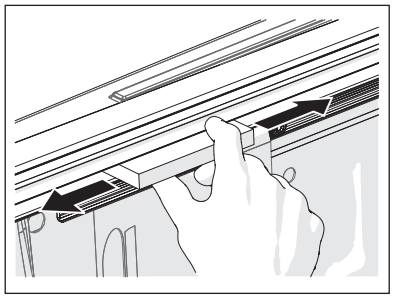

IMPORTANT: NEVER spray any lubricant or cleaner in the rails. THIS WILL VOID THE WARRANTY.
The bearings are sealed and will not need any lubricant or spray.
If the rails feel sticky, run paraffin wax along the rail.

IMPORTANT: Read these instructions BEFORE installing the *Retrax* cover.

Use caution when cutting the wire ties holding the wire harness together so that you do not cut the wires. Inspect the wiring. Do not install damaged wires as they could become a hazard.

Split wire loom	A
Fuse holder	B
(2)-10 Amp fuses	C
Wire harness	D
(10) Wire ties	E
Electronics	F
LED lamp	G
(2) Key fobs- transmitters	H
Electric cover accessory packet	I

Electric Cover Accessory Packet

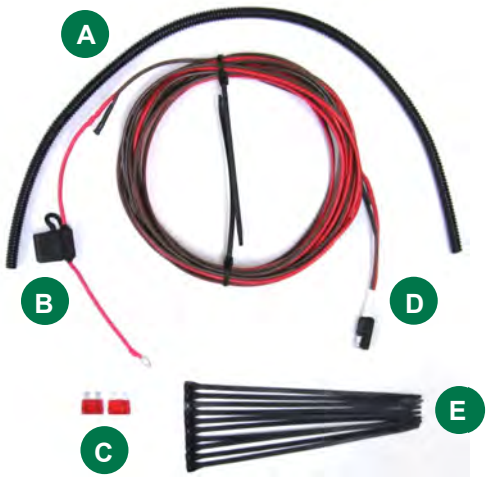

Driver Side Spiral Canister

STEP 1-3: Routing wiring harness from battery to truck bed

1. Using a wire tie, secure the fuse holder end of the wire harness near the battery (red wire and brown wire). ***Note: Do not connect the wiring harness to your battery yet.***
2. Route the wire harness to the driver side of the truck if it is not already. (Using wire ties, secure the wiring harness so it does not come into contact with moving parts or exhaust pipes.)
3. Route the wiring harness down along the frame rails to the truck box as shown on the right. Keep the wires as high as possible to prevent damage while driving. Secure the wiring harness with ties every 2 - 3 feet.

Wiring Harness Routing Along Frame Rail

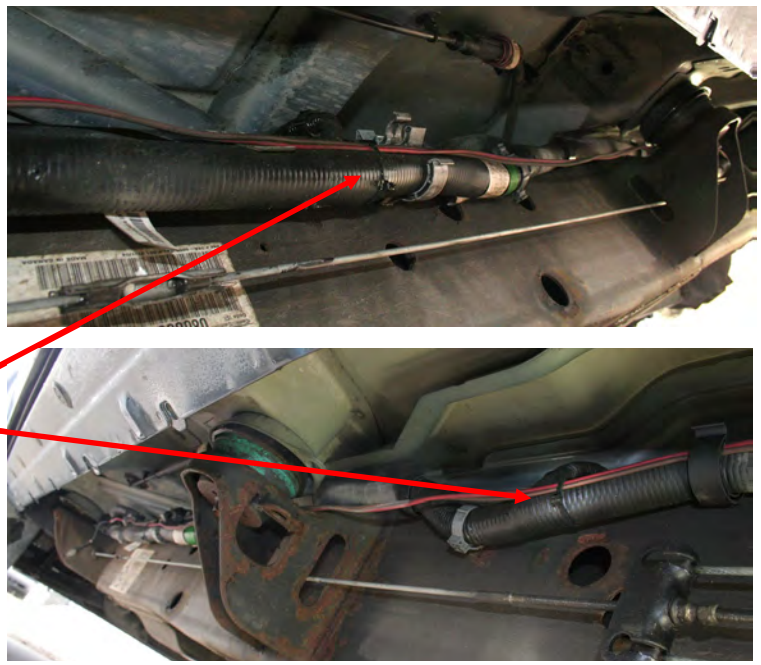

STEP 4: Wiring options

OPTION 1: Route 24" of wire to driver side cab end of drain holes in the bed. Use split wire loom to wrap around the wires as a barrier between the wires and the drain tube hole. (NOTE: this may require a larger hole than normal.)

OPTION 2: Route the wiring in the gap between the cab and truck bed (leave about 24" in truck bed). The wires will be hidden under the front weather-stripping of the *RETRAX* cover.

Proceed with the *RETRAX* standard instructions steps 1-9. Then refer back to this page for connection wiring. *Disregard all references to 'lock'- Not applicable for POWERTRAX.*

NOTE: The electric cover has no lock assembly. Cover will not move out of the canister at this point of installation.

STEP 10: Connect the wiring harness to electronics box and battery

A. There is a white label wrapped with “Power” on it to ensure proper connections are made. (Ensure the connectors are securely connected. (Connectors labeled “Motor” will come attached.)

B. Connect the wires to the battery and install a fuse in the fuse holder. The **RED** wire (with the fuse holder) to the **POSITIVE** post, and the **BROWN** wire will connect to the **NEGATIVE** post.

For proper cover operation, ensure rails are positioned correctly (must be parallel). See step 6 & 7 in standard instructions).

These surfaces must be level

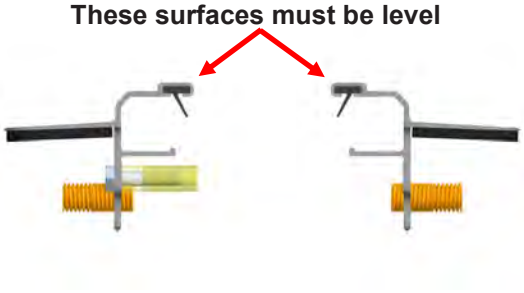

Operation of the *POWERTRAX*

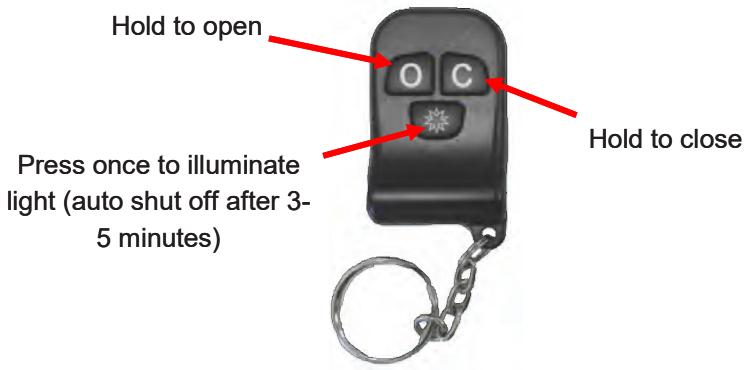

NOTE: The *RETRAX* cover has superior quality rail weatherstrip seals. The weatherstrip seals will have an initial 48 hour break in period. Please inform the end user to help the cover to the tailgate each time the cover is opened for the first 48 hours or until it is able to close completely on its own.

This device complies with Part 15 of the FCC Rules. Operation is subject to the following two conditions: (1) this device may not cause harmful interference, and (2) this device must accept any interference received, including interference that may cause undesired operation.

Check the parts shown here, this model has different requirements than the standard parts.

Continue with the standard instructions through step 3 (pg. 2), then return back to this guide on how to install the mounting hardware.

(6) 5/16-8 x 1” bolts	A
(6) 5/16” lock washers	B
(6) mounting blocks	C
(6) 1/4” flat washers	D
(6) 1/4-28 x 1” bolts	E
(6) t-slot nuts	F
0.050” spacers (optional for step 7)	G

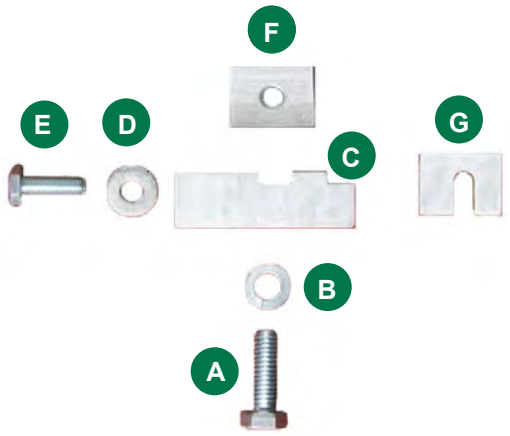

STEP 4: Measure and mark the top of the factory track for mounting block locations

Make a mark at the 3 spots shown below.

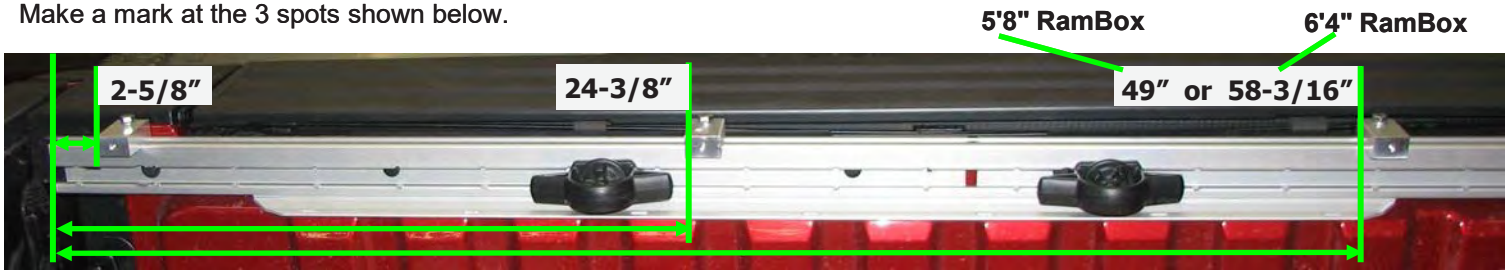

Tailgate end

STEP 5: Assemble and position 6 mounting blocks

Tighten t-slot nut, lock washer, and bolt securely with 1/2” wrench. Repeat with middle and back mounting blocks.

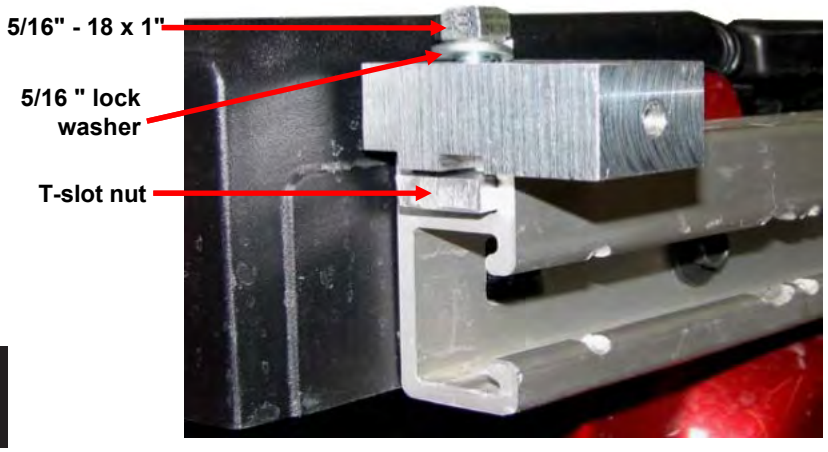

STEP 6: Lift the assembled cover into the bed and position the rails

Using two people lift the cover and place it at the very front of the bed. Close the tailgate of the pickup.

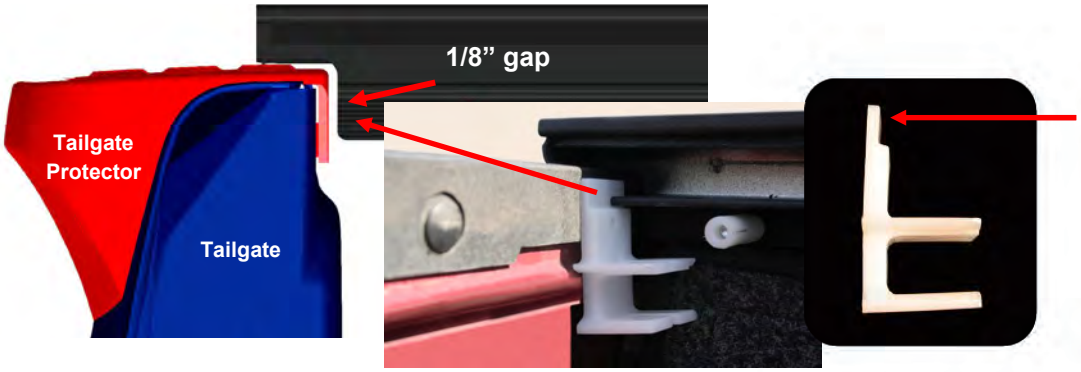

Move the rails to achieve the 1/8” gap using the 1/8” part at the top of the bracket. Make certain the rails do not move after measuring.

NOTE: The front cover weather-strip must lay flat across the truck bed. Make certain it is pointed towards the cab. If it extends past the bed rail cap, cut to fit right up to the cap on the truck bed.

STEP 7: Position and bolt *RETRAX* rails to mounting blocks

Center the threaded holes in the mounting blocks behind the openings of the ***RETRAX*** rail. Install 1/4" - 28 x 1" bolt and flat washer in all 6 holes. Use a 7/16" wrench to fasten.

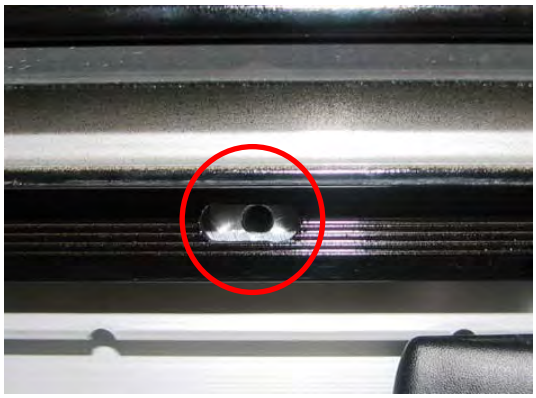

Continue with standard instructions at step 6 (pg. 5)

FOR STEP 7 IN STANDARD INSTRUCTIONS:
The .050" spacers can be used to narrow the distance between the rails if needed to get the rails parallel to each other. Position the spacers between the back of the ***RETRAX*** and mounting block.

NOTE: Due to the unique configuration of the Dodge Ram Box rails and tool boxes, it is not possible to completely seal the bed with a bed cover. 18" of 1/2" thick self-adhesive weatherstripping has been provided that can be applied where desired at the owner's/installer's discretion.

Dodge Ram Box 2019-up Installation

Check the parts shown here, this model has different requirements than the standard parts.

Continue with standard instructions through step 3 (pg. 2), then return back to this guide on how to install the mounting hardware.

A	Ram Box Rail LH (driver side) (1)	G	Lock Washers 1/4 (6)	L	Rail End Cap RH(passenger side) (1)
B	Ram Box Rail RH (passenger side) (1)	H	Flat Washers 1/4 (6)	M	End cap screws (2)
C	Foam Blocks (2)	I	Bolts 5/16-18 x 5/8" (6)		
D	Mounting Blocks (6)	J	Lock Washers 5/16 (6)		
E	T-slot Nuts (6)	K	Rail End Cap LH(driver side) (1)		
F	Bolts 1/4-28 x 1/2" (6)				

STEP 1: Remove cargo rail end caps

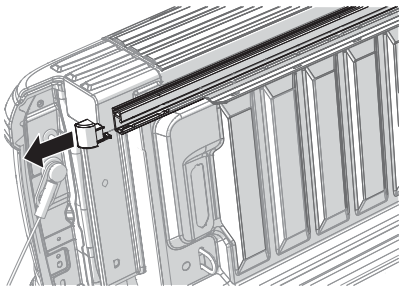

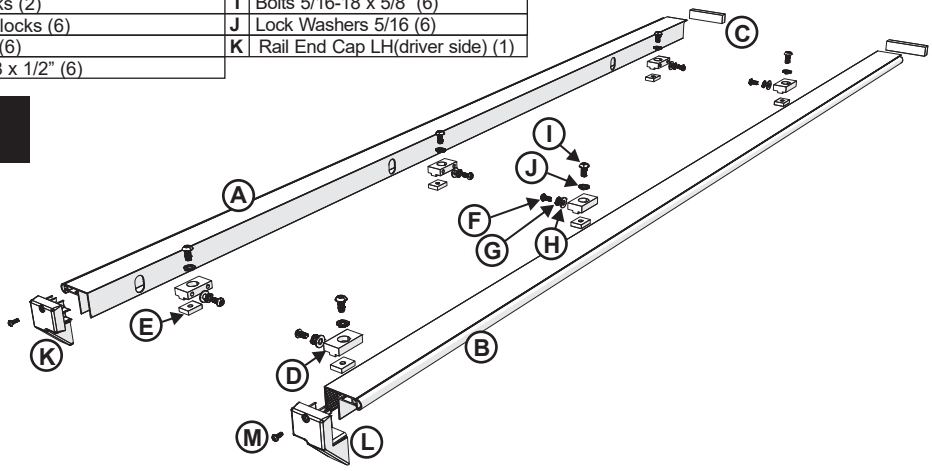

STEP 2: Install mounting hardware

Slide the T-slot nut into the top of the cargo rail. Position the mounting block on top and fasten with a 5/16-18 bolt through a 5/16 lock washer.

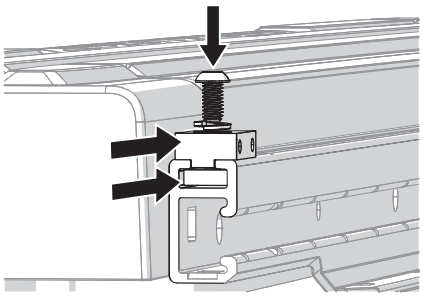

Position three block assemblies in each cargo rail, both sides, to the dimensions shown from the tailgate end of the cargo rail. Then tighten the screws.

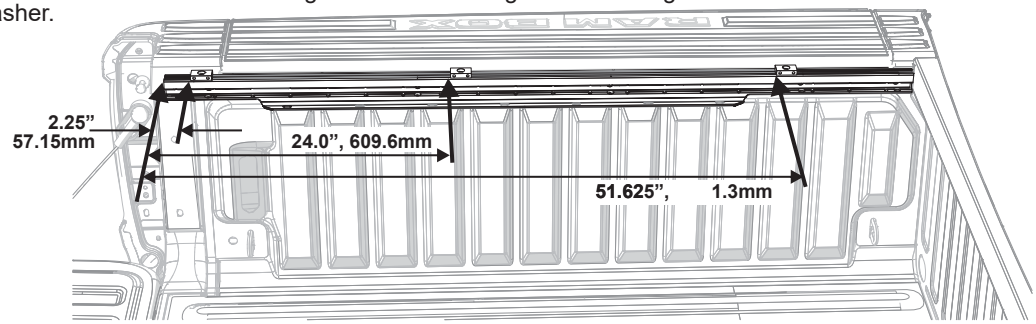

STEP 3: Place the Ram Box rails and foam seals

Place the Ram Box rails onto the mounting hardware. Before sliding the rails to the bulkhead, adhere a foam block seal to the top of the truck's bulkhead where it meets the front of the Ram Box rail.

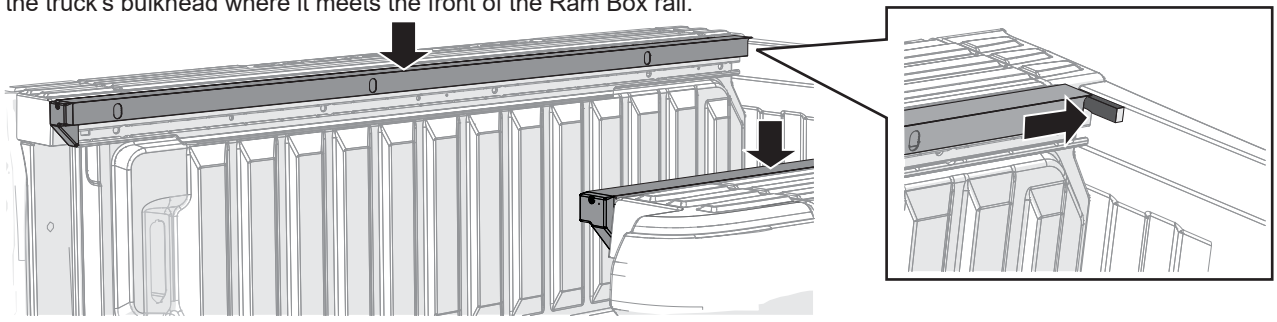

STEP 4: Install the rail mounting hardware

Thread a 1/4-28 x 1/2" bolt through a 1/4 lock washer and through a 1/4 flat washer into the mounting block.

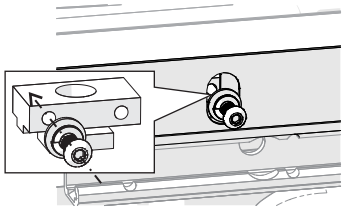

Before tightening the hardware, make sure the top of the Ram Box rail is level with the top of the plastic bed rail cap.

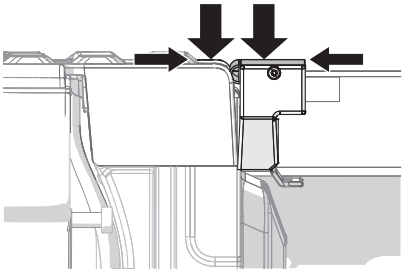

NOTE:

After the cover is installed verify that the cover seal touches and seals to the truck tailgate. If not, the Ram Box rails may need to be adjusted up or down.

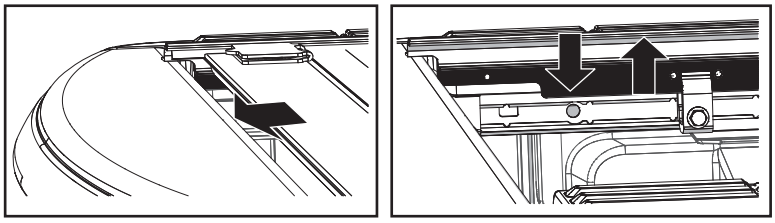

Once the Ram Box rails are mounted, continue with the standard instructions, step 4 on page 3.

Check the parts shown here, this model has different requirements than the standard parts.

(4) M6 x 40mm (metric) Allen head mounting bolts	A
(2) 1/4" lock washers	B
(2) 1/4" flat washers	C
(2) nylon spacers	D
(4) 10-24 x 1" stainless screws with black caps	E

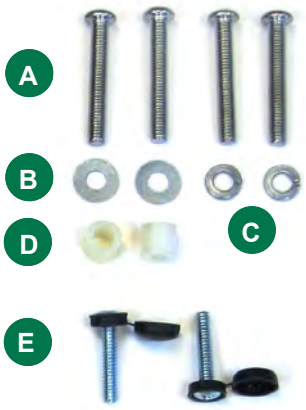

4mm Allen wrench	F
#40 Torx insert bit	G
(2) foam fillers for front tie -downs	H
(2) plugs for middle holds (step 8)	I
(2) front mounting brackets	J
Newer models may need rubber spacer at passenger rear mount	K

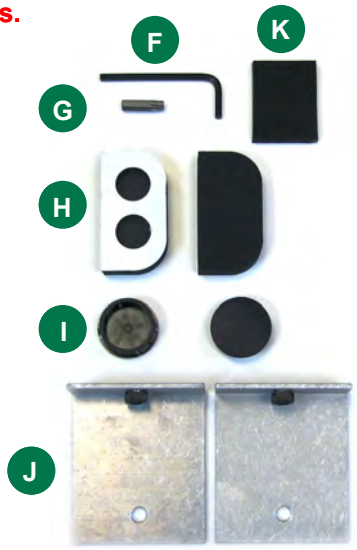

Continue with standard instructions though step 3 (pg. 2), then return back to this guide on how to install the mounting hardware.

STEP 4: Attach adhesive to rails

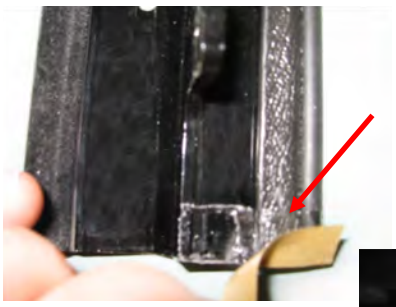

Remove the adhesive backing paper from under the front of both rails.

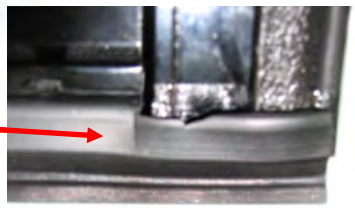

Push the front seal firmly into place over the adhesive keeping the seal even

STEP 5: Remove factory bolts

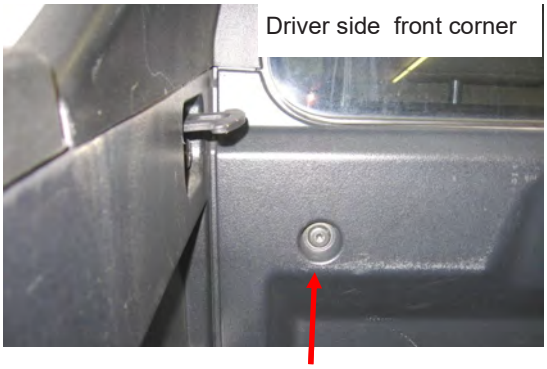

Remove the factory bolts from both corners of the front wall of the bed. Use #40 Torx bit. (included)

STEP 6: Remove factory screws

Remove factory screws and spacers from both rear posts using #40 Torx bot. Driver's rear corner is shown.

STEP 7: Attach foam to tie downs

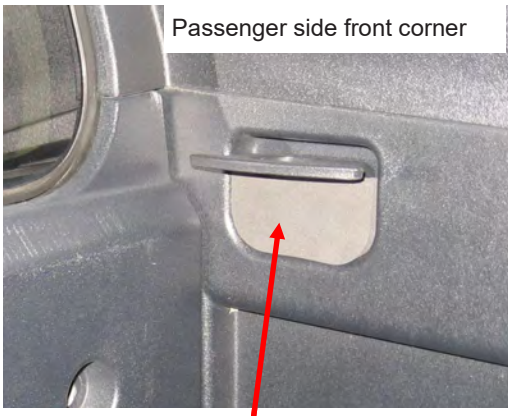

Remove the adhesive backing paper from the foam fillers for the tie-downs. Push into place over the tie-down bolts. Repeat on driver's side.

STEP 5: Install front mount brackets

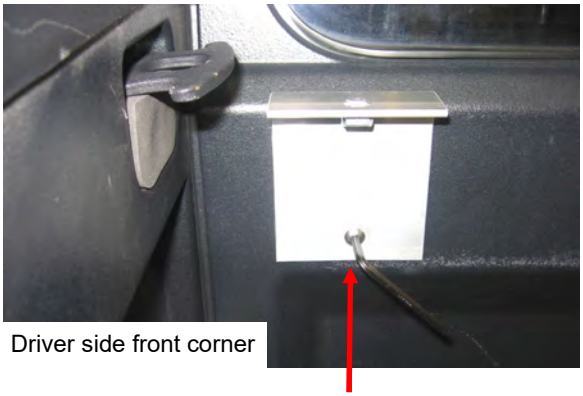

Driver side front corner

Install front mount brackets as shown. Slide lock washer onto M6 x 40mm bolt, push bolt through hole in mount bracket and start threading into front holes in the bed. **Hold mount bracket level** and tighten using the 4 mm Allen wrench (included). Repeat on passenger side.

STEP 6: Insert plastic plugs

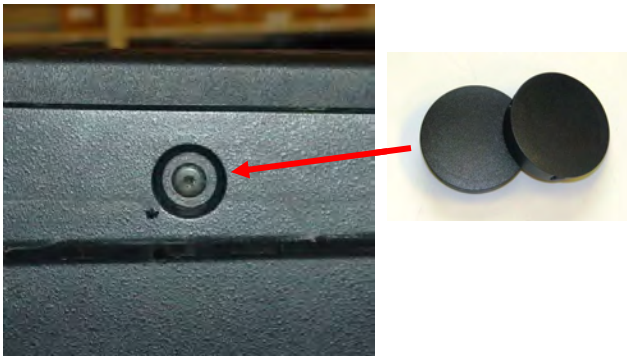

Insert black plastic plugs into middle holes. Push the 2 supplied plugs into the 2 middle factory holes on both sides of the bed.

STEP 7: Lift the assembled cover into the bed

Using two people, lift the cover and place it at the very front of the bed. Close the tailgate of the pickup.

STEP 8: Attach front cover to brackets

Start threading the (2) 10-24 x 1 mounting screws w/ black caps through the front cover into the front mount brackets. Do not tighten yet. Once rear brackets are tight, then fully tighten front screws using a #2 Phillips screwdriver. Fasten screw cover when finished.

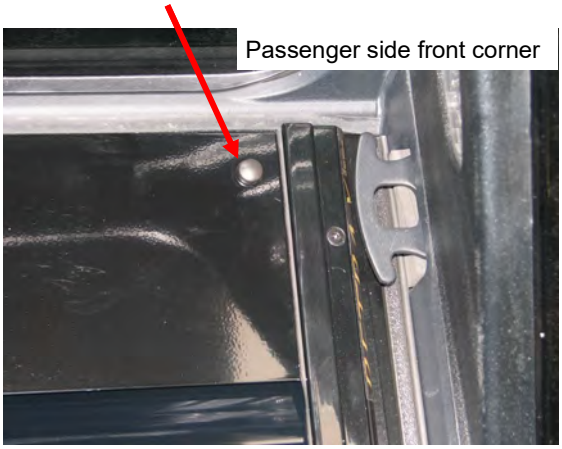

Passenger side front corner

STEP 9: Attach rear end to brackets

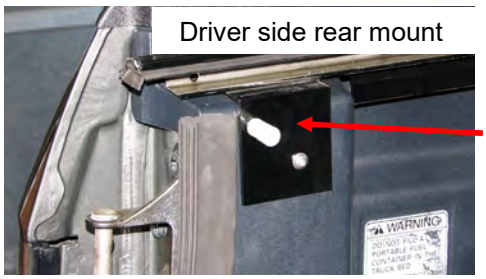

Driver side rear mount

Start rear mounting screws. Slide a flat washer onto the (2) M6 x 40mm (metric) rear mount bolts, insert bolts through holes in rear rail brackets, then insert nylon spacer and start threading into factory holes at rear. Use 4mm Allen wrench.

STEP 10: Select proper mounting hole location

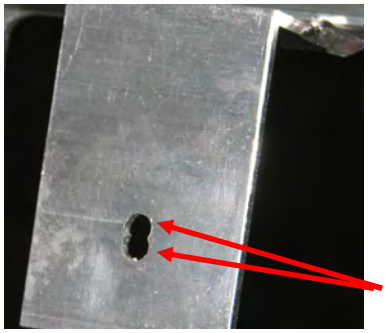

Passenger rear mount holes

On the passenger rear mount plate, the hole used depends on if the rubber spacer is needed (see step 11). Most 2008 and older beds use the upper holes without the spacer. During the 2008 model year the passenger side of the Honda tailgate was raised slightly. The late 2008 and newer models use the lower hole and the rubber spacer. This is needed for clearance over the tailgate.

STEP 11: Add rubber spacer

Passenger rear mount

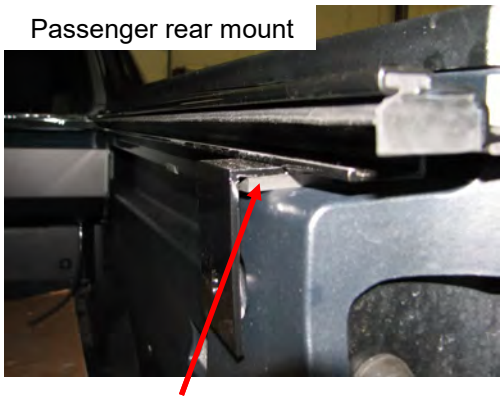

The rubber spacer provided can be added under the passenger rear mount bracket for proper clearance over factory tailgate protector.

Peel off adhesive strip from rubber spacer and attach spacer underneath mount bracket.

STEP 12: Assemble and install drain tube

Remove all of the protective plastic film from the canister.

Insert the drain tube into the canister on both sides,
rotate to the right, clockwise, the fitting will click twice when secure.

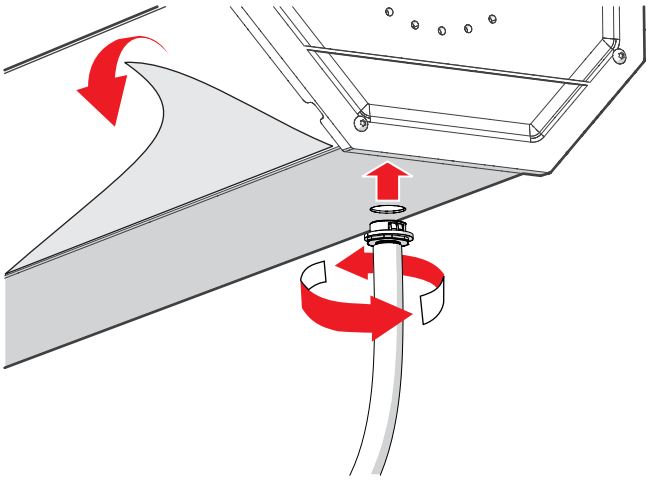

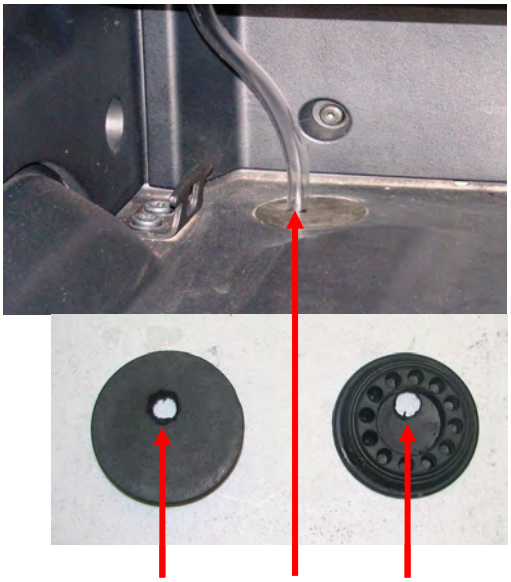

You can pass the tubes through the 2 factory plastic bed bolt covers. Remove the covers and drill a loose ½" hole or a 9/16' hole for the tubes. Offset the holes as shown.

Optional rail weatherstrip adjustment: The inside walls of the Ridgeline bed have a slight bow outward from front to the back. This can cause a slight gap between the rail weatherstrip and the side wall of the bed. The rail weatherstrip can be moved toward the bed wall if needed. Slide the weatherstrip firmly against the wall to close the gap.

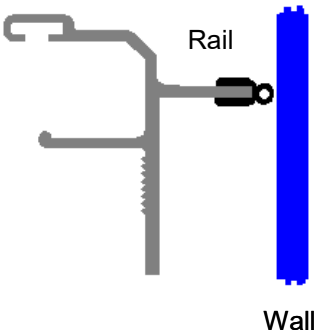

Rearview passenger side rail

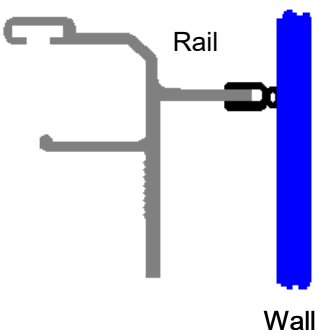

Rearview passenger side rail

Refer back to the standard instructions page 6 for final notes, maintenance, use and the warranty statement.

The 2017 Ridgeline requires a rail mount to be installed before the installation of the *RETRAX* cover.

Check the parts included in the rail box (shown below).

(4) Small rail bracket	A
(4) Large rail brackets	B
(8) Rail mount screws	C
(2) Rails	D

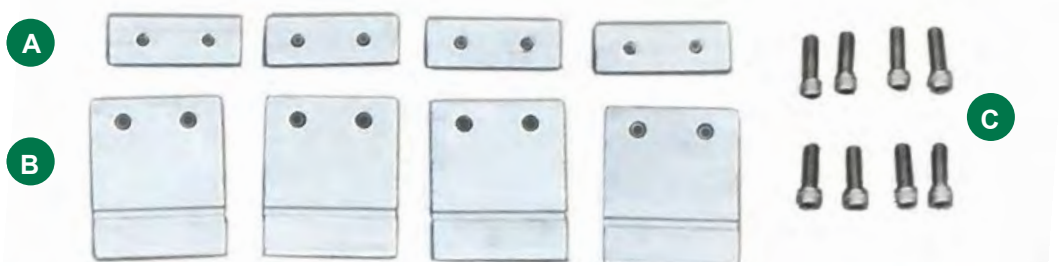

Follow the mounting instructions on the insert for the kit (included in rail box).

INSTALLATION INSTRUCTIONS — IMPORTANT- INSTALL THESE RAILS FIRST

2017 Honda Ridgeline Mounting Rails

Tools Required:

- T50 Torx driver
- 7/16" Wrench

1 Remove the 4 upper tie-down hooks. Keep the 8 Torx bolts, but do not reuse the tie-down hooks.

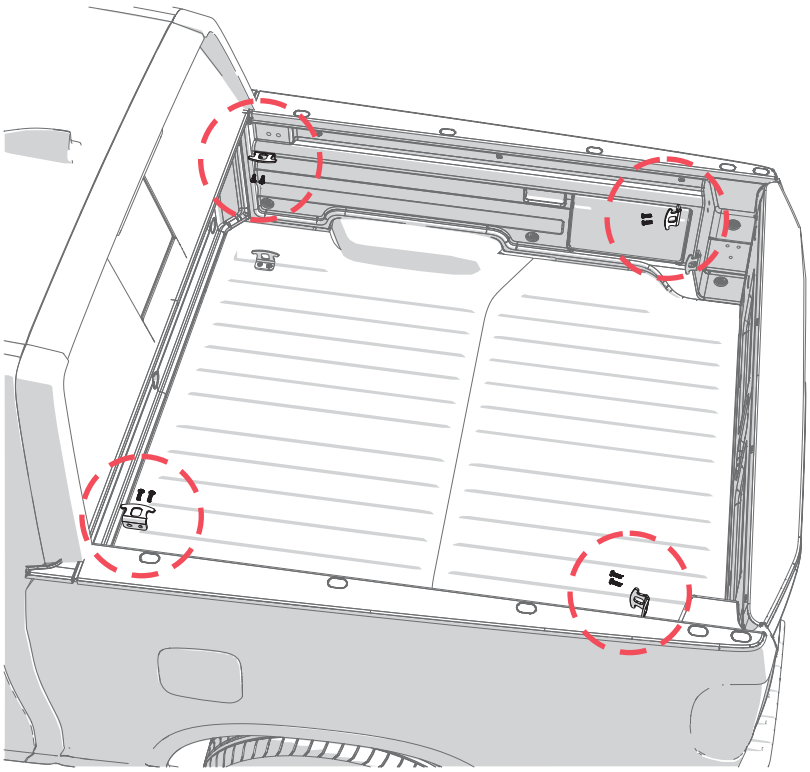

Front, upper tie-down hooks. Both sides.

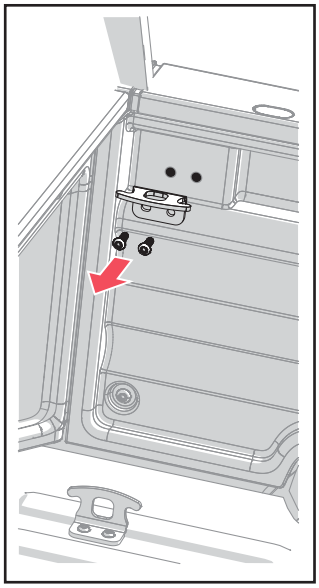

Rear, upper tie-down hooks. Both sides.

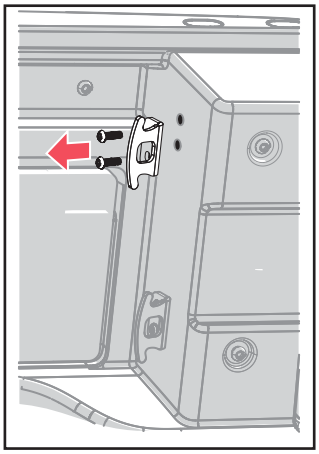

Once the rail kit is installed, continue with the standard instructions for the RETRAX cover on page 2.

Check the parts shown here, this model has different requirements than the standard parts.

WITH Utili-track:

(4) bracket bolts	A
(4) rail bolts	B
(4) 1/4” lock washers	C
(4) nylon washers	D
(8) 1/4” flat washers	E
(4) rail brackets	F

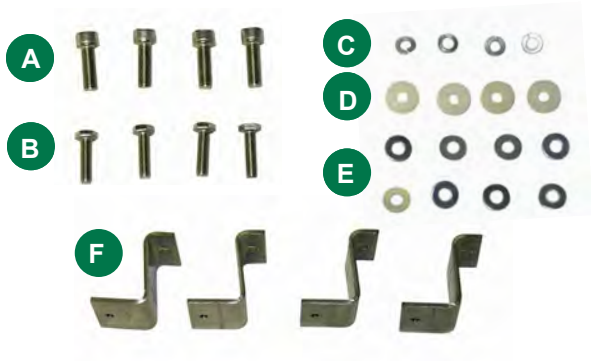

Follow standard instructions through step 3, (pg. 2) then refer back to this guide on how to install mounting hardware.

WITHOUT Utili-track:

The Frontier with no Utili-track uses the clamps below.

Continue with the standard instructions on Page 2.

STEP 4: Remove the bolts from existing Utili-track rails and attach brackets

Remove all 8 white nylon rail adjustment spacers from the rails then proceed below.

Frontier Crew Cab
Remove these bolts from both sides

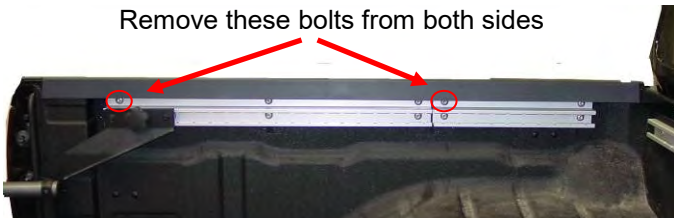

Frontier King Cab
Remove these bolts from both sides

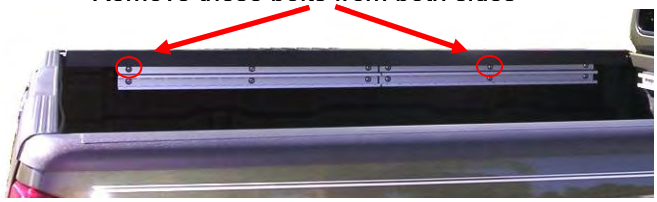

Attach all 4 rail brackets to these holes using the 4 bracket bolts (long leg points up).

FOR STEP 7 IN STANDARD INSTRUCTIONS:

To decrease the distance between the rails you add spacers next to the nylon washers between the *RETRAX* rail and the rail bracket. To increase the distance between the rails you remove washers or use thinner washers in place of the nylon spacers.

STEP 5: Lift the assembled cover into the bed and position rails

Using two people, lift the cover and place it at the very front of the bed. Close the tailgate of the pickup. Using the 1/8” part at the top of the supplied shipping bracket, move the rails to achieve the 1/8” gap between the tailgate.

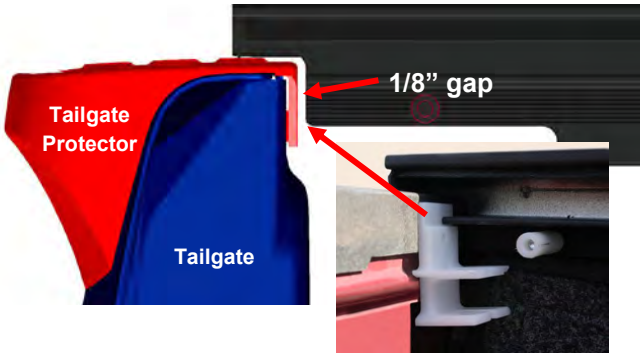

STEP 6: Attach *RETRAX* rails to rail brackets

Use a rail bolt with lock washer and flat washer and insert through hole in ***RETRAX*** rail then use 1 white nylon washer between the rail and rail bracket. Start threading the rail bolt into the rail bracket.

Continue with the standard instructions at step 6 (Pg. 5)

Nissan Titan 2004-up Installation

Check the parts shown here, this model has different requirements than the standard parts.

5.5' - 6.5' bed WITH Utili-track

The Nissan Titan has the Utili-track and uses the 4 clamps below.

Follow standard instructions through step 3, (pg. 2) then refer back ⇨ to this guide on how to install mounting hardware.

5.5' - 6.5' bed WITHOUT Utili-track

The Titan with no Utili-track uses the 4 clamps above.

Continue with the standard instructions on Page 2.

8' bed WITH Utili-track:

From the clamp kit assemble 6 groups of clamps as shown, use the shorter bolts (2"), the cut clamp bases and utility bed fastening clamps.
Follow the standard instructions through step 3, (pg. 2) with only these 6 clamps, the remaining clamps are not used.

8' bed WITHOUT Utili-track

From the clamp kit assemble 6 groups of clamps as shown, use the longer bolts (2.5"), full body clamp bases and standard fastening clamps.
Follow the standard instructions through step 3, (pg. 2) with only these 6 clamps, the remaining clamps are not used.

STEP 1: Remove plastic caps

Remove and save the black plastic cap at the rear of the Utili-track on both sides of the truck.

NOTE: The factory tie-downs may cause interference with the lock when rolling.

Option 1: Use as is and push lock handle down slightly to bypass the factory tie-downs.

Option 2: Remove the tie-downs before installation. **(disregard further reference to tie downs.)**

Option 3: Smaller aftermarket tie-downs may be utilized in place of the larger original tie-downs.

STEP 2: Insert mounting cleats

Loosen and slide out the movable truck tie downs on each side of the bed. Insert (1) mounting cleat into the track system on each side, position it underneath the white nylon spacers **closest to the front of the bed.**
Important: Hole should be toward bottom of channel.

FOR STEP 5 ON STANDARD INSTRUCTIONS:

This photo shows how the clamp will mount to the rail. It is **important** to be sure that the threaded hole on the cleat is closest to the bottom of the C-Channel.

Rear View Passenger Rail

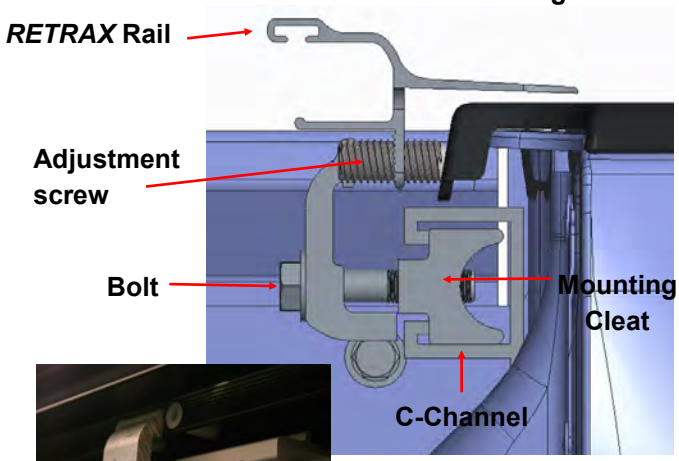

STEP 3: Re-insert tie downs and 2nd cleat

Re-insert tie downs into the track. Insert 2nd mounting cleat into track system on each side and position it underneath the white nylons spacers closest to the tailgate.

Finish by re-inserting the black plastic cap into the rear of the track system.

Continue with the standard instructions at step 4 (Pg. 3)

FOR TITAN 5.5' BED: All rail spacer screws will need to be turned approx. 5 full turns. The final spacer depth should be 0.750" from the back of the rail leg to the surface of the spacer screw that touches the truck.

Check the part shown here, this model has different requirements than the standard parts.

(8) rubber rail adjustment spacers	A
(4) cleats	B
(4) rail spacer blocks	C

Follow standard instructions through step 3, (pg. 2) then refer → back to this guide on how to install mounting hardware.

STEP 4: Install front rail gasket

Be sure foam is added to front bed rail, not the C-Channel rail. Trim to fit.

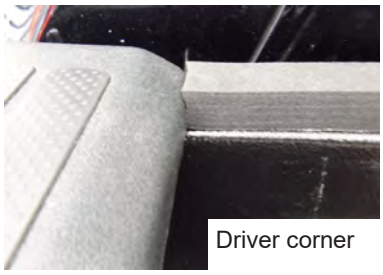
Driver corner

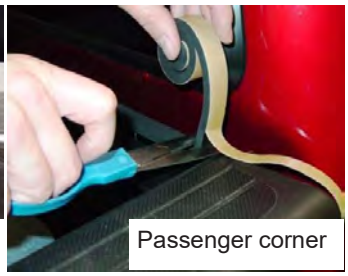
Passenger corner

STEP 5: Insert mounting cleats

Remove and save the black plastic cap at the rear of the Deck Rail track system on both sides of the truck. Loosen and remove tie-downs or other accessories from each side.

Insert (2) mounting cleats into the track system on each side.

STEP 6: Lift assembled cover into bed and position the rails

Using two people, lift the cover and place it at the very front of the bed. Close the tailgate of the pickup.

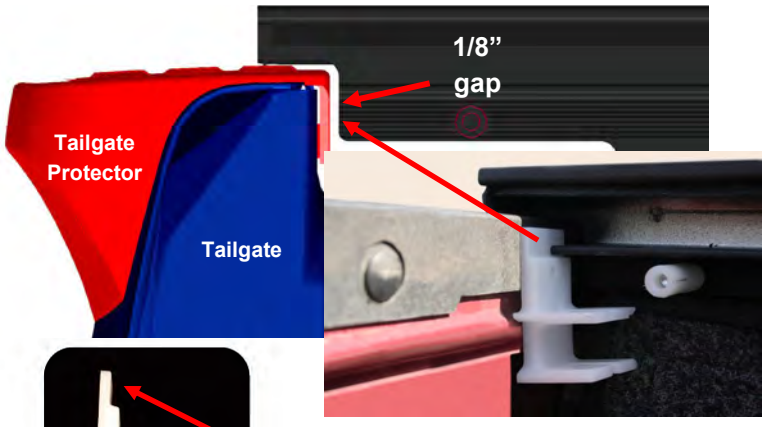

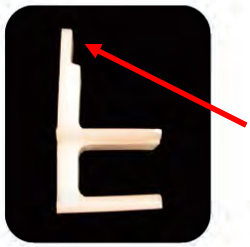

Move the rails to achieve the 1/8" gap using the 1/8" part at the top of the bracket. Make certain the rails do not move after measuring.

STEP 7: Bolt rails to pickup bed rails

Position rail spacer block and cleat in line with the hole in the rail. Start threading bolt with washer into cleat. Attach using a 9/16" wrench. Repeat at other 3 mount locations. Keep rail level when tightening bolts.

Rail spacer block

FOR STEP 7 IN STANDARD INSTRUCTIONS:

If the rails are too far apart add rubber rail adjustment spacers. Loosen the rail mount bolt and slide spacer between bed cover rail and rubber side of spacer block.

Continue with the standard instructions at step 6 (Pg. 5)

Check the parts shown here, this model has different requirements than the standard parts.

Tools Required: T-30 torx driver

5' MODEL PARTS

(4) 1/4" flat washers	A
(4) 1/4-28 x .75 fastener	B
(4) 3/8-16 x 1.5 fastener	C
(4) 3/8" split washer	D
(4) cleats	E
(4) 0.050 adjustment shim	F

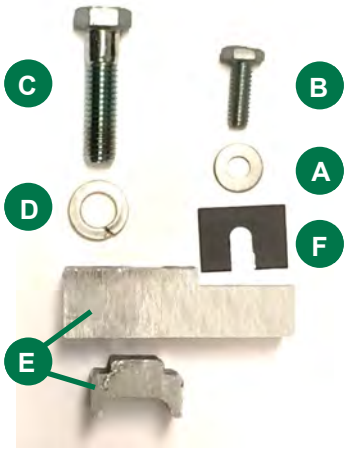

6' MODEL PARTS

(4) 1/4" flat washers	A
(4) 1/4-28 x 1.5 fastener	B
(4) 3/8-16 x 1.5 fastener	C
(4) 3/8" split washer	D
(4) cleats	E
(4) 0.050 adjustment shim	F
(4) plastic spacer blocks	G

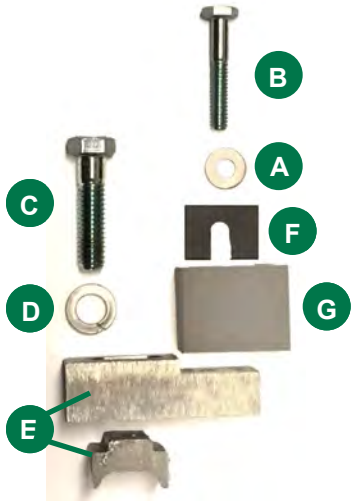

6' model refer to page 22

RECOMMENDED FOAM (5' model only)

Remove film from the canister on the 5' model only, before installation.

On the 5' model, there is an aluminum lip that sticks out on the bottom of the canister. The supplied foam pieces are recommended to prevent scratches on your truck.

With the edge of the cover facing you, roll the canister **90° away** from you. The foam will line up with the rear-bottom fold . Remove adhesive backing and apply the foam to both sides.

Rear-bottom fold

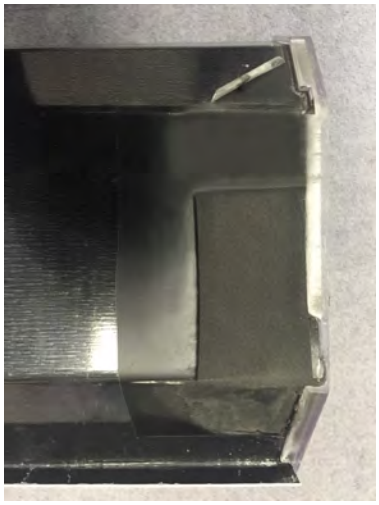

5' MODEL ONLY:

Remove the front tie downs in the bed. Use a T-30 torx.

STEP 1: Install seal

FOR BOTH MODELS:

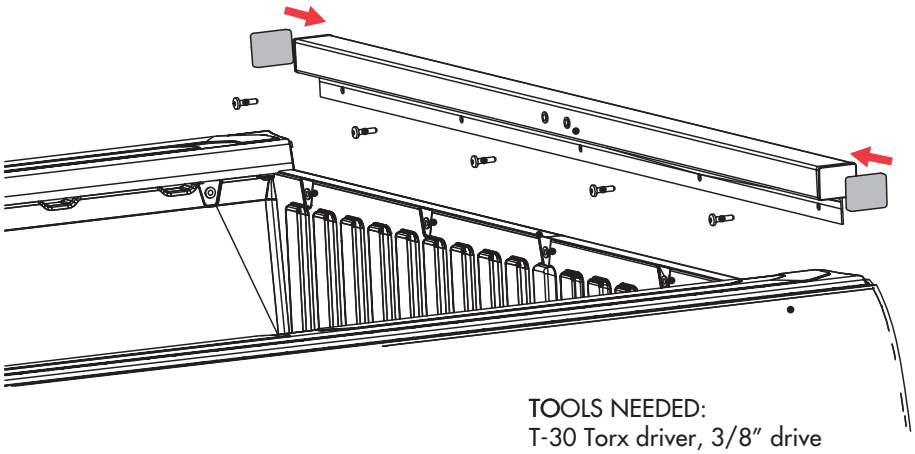

TOOLS NEEDED:
T-30 Torx driver, 3/8" drive
short extension, ratchet

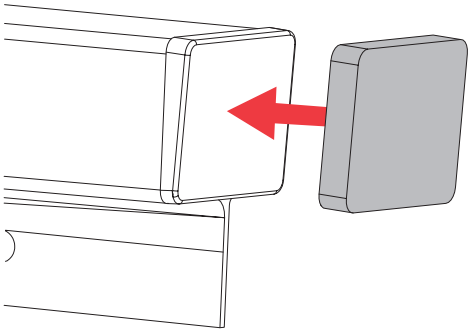

1 Remove factory cab header rail

2 Use T-30 Torx driver to remove 5 fasteners securing header rail to front bulkhead below cab rear window

3 Peel backing paper off of foam seal and adhere to header rail endcaps

4 Reposition factory cab header rail on truck bed

5 Install and and torque all mounting bolts to 7.5Nm (66.5 lbs-in)

STEP 2: Insert mounting cleats

Remove and save the black plastic cap at the rear of the Deck Rail track system on both sides of the truck. Loosen and remove tie-downs or other accessories from each side.

Insert (2) mounting cleats into the track system on each side.

STEP 3: Bolt spacers to *RETRAX* rails

1. Mount spacer block prior to cover installation to pickup bed.

2. Use the 1/4-28 fastener and 1/4" flat washer on the inside of the rail. Attach with 7/16" wrench.

Passenger side rail

6' model

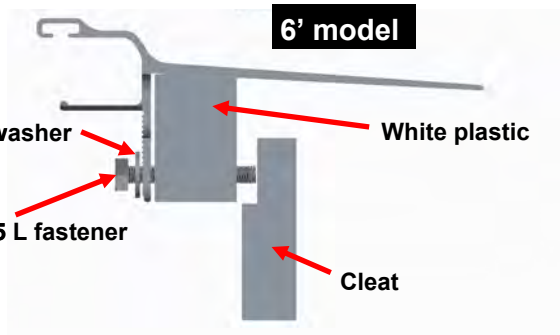

Passenger side rail

5' model

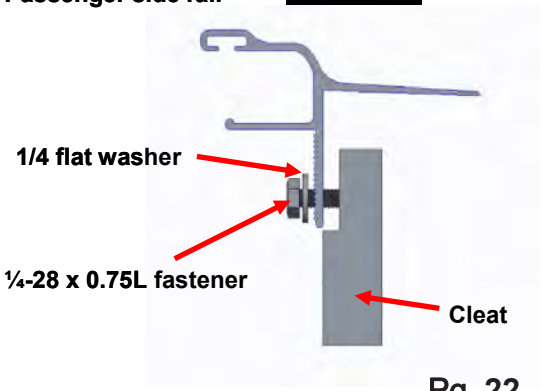

Continue with standard instructions through step 6 (pg. 5) DISREGARD STEP 5, then refer back to this guide on how to install and adjust the mounting hardware.

STEP 7: Bolt rails to pickup bed rails

Passenger side rail

5' model

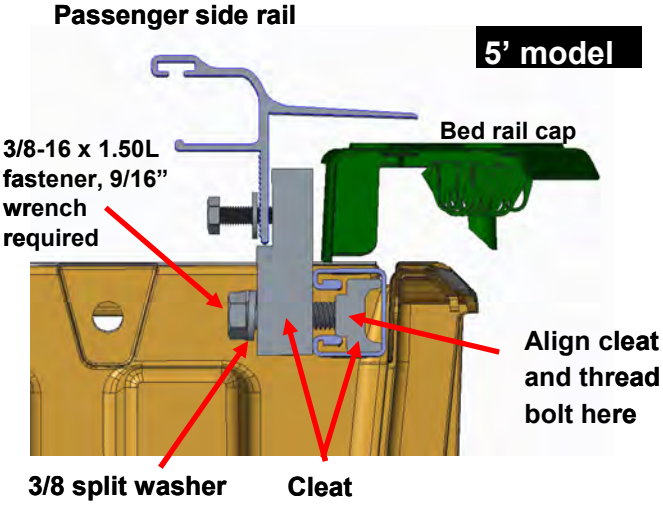

6' model

Passenger side rail

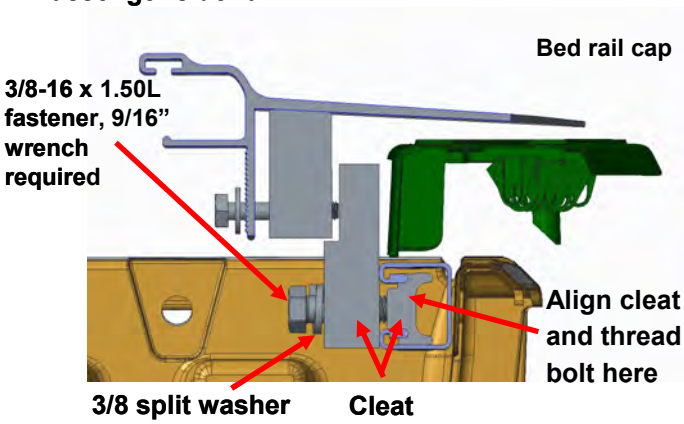

Make certain the rails are parallel - see page step 6 (Pg. 5). If not, see adjustments below.

STEP 8: Adjust rails to maintain parallel rails

If rails are too far apart add 0.050 shim between rail and aluminum spacer . Continue adjustment until rails are parallel. Shim is circled in red.

5' model

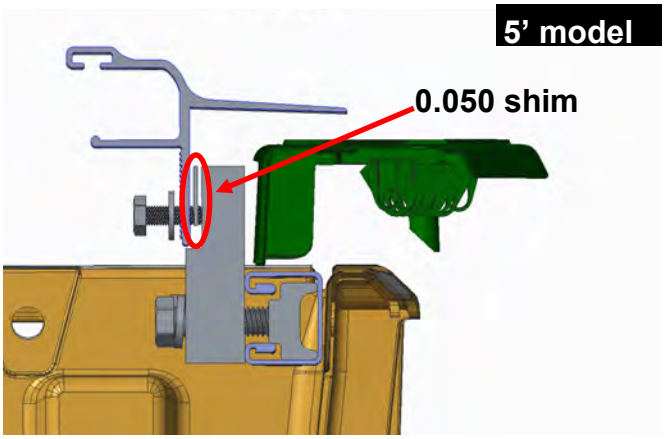

6' model

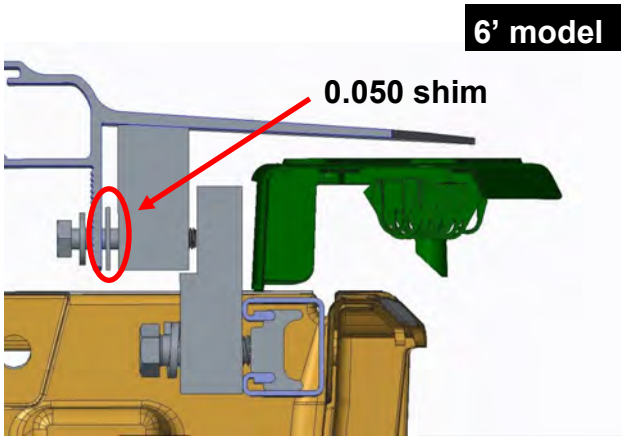

Continue with the standard instructions at step 9 (Pg.6)

Check the parts shown here, this model has different requirements than the standard parts.

Follow standard instructions through step 3, (pg. 2) then refer back to this guide on how to install mounting hardware.

STEP 4: Remove plastic caps

Remove and save the black plastic cap at the rear of the Deck Rail track system on both sides of the truck. Loosen and slide out the movable truck tie downs on each side of the bed.

STEP 5: Re-insert tie-downs and 2nd cleat

Re-insert the tie down clamps on each side of the bed, before inserting 2nd cleat.

After putting tie downs back into bed, insert 2nd mounting cleat into track system on each side, positioning it approximately 8" from tailgate.

Finish by re-inserting the black plastic cap into the rear of the track system.

Continue with the standard instructions at step 4 (Pg. 3)

STEP 6: Insert mounting cleats

Insert 1 mounting cleat into the track system on each side, position it about 15" from the front of the bed.

FOR STEP 5 ON STANDARD INSTRUCTIONS:

This photo shows how the clamp will mount to the rail. It is **important** to be sure that the threaded hole on the cleat is closest to the bottom of the C-Channel.

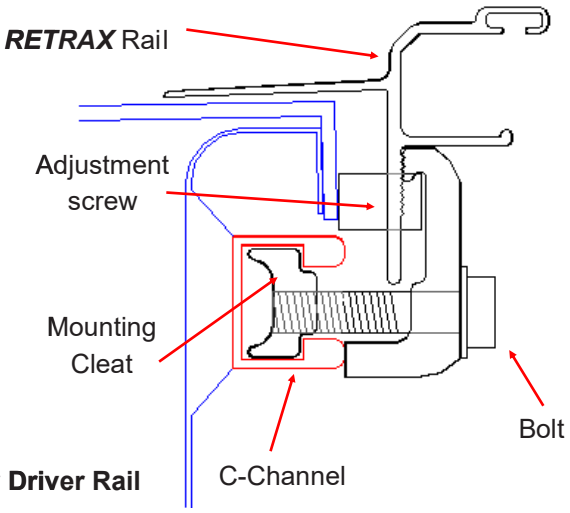

Rear View Driver Rail

Ford Ranger 2019-up Supplement to Bed Cover Installation

Continue with the standard instructions through step 3 (pg. 2), then return back to this page.

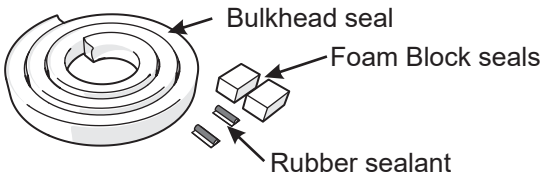

STEP 1: Install bulkhead foam seal

Clean the top of the bed bulkhead. Peel off the paper adhesive cover and apply the foam seal to the top of the bulkhead. The seal should be oriented as shown, flush with the inside face and snug between the bed rail caps.

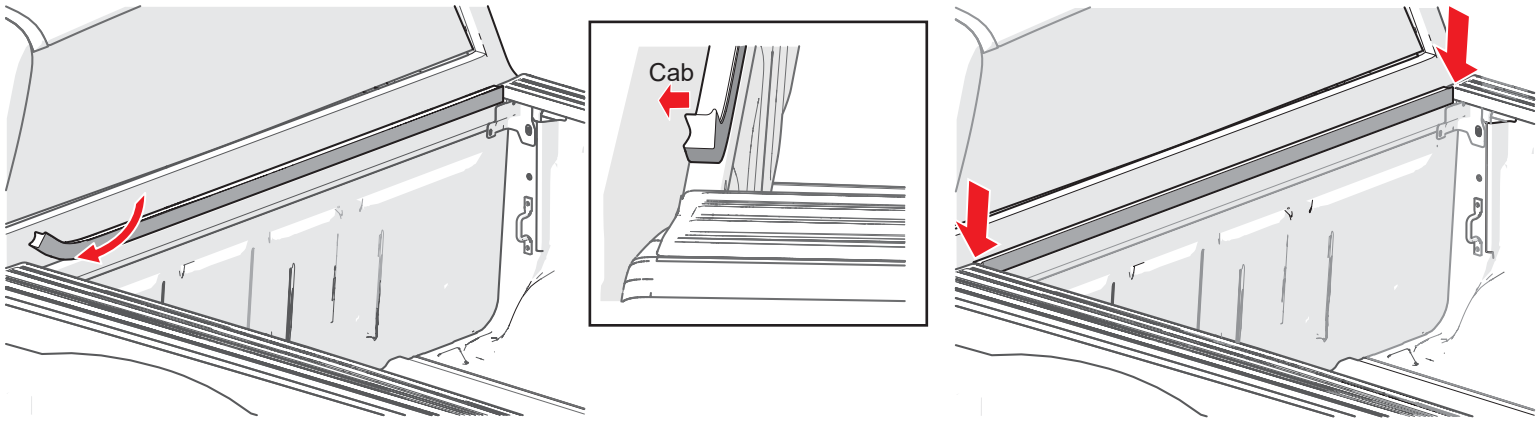

STEP 2: Install the foam block seals

Clean the top of the bed bulkhead underneath the bed rail cap. Peel off the paper adhesive cover and apply the foam block seal to the top of the bulkhead and underneath the bed rail cap. Install one foam block on each side.

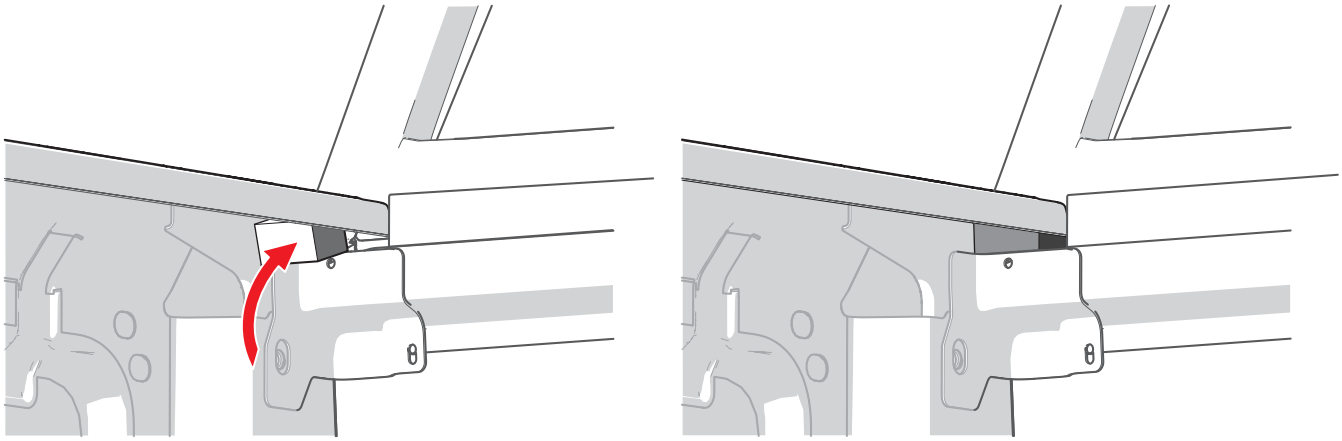

STEP 3: Plug the bulkhead face holes

Plug the small holes in the corner of the bulkhead face. Use a portion of the rubber sealant provided to plug the holes indicated. Plug the hole on both sides.

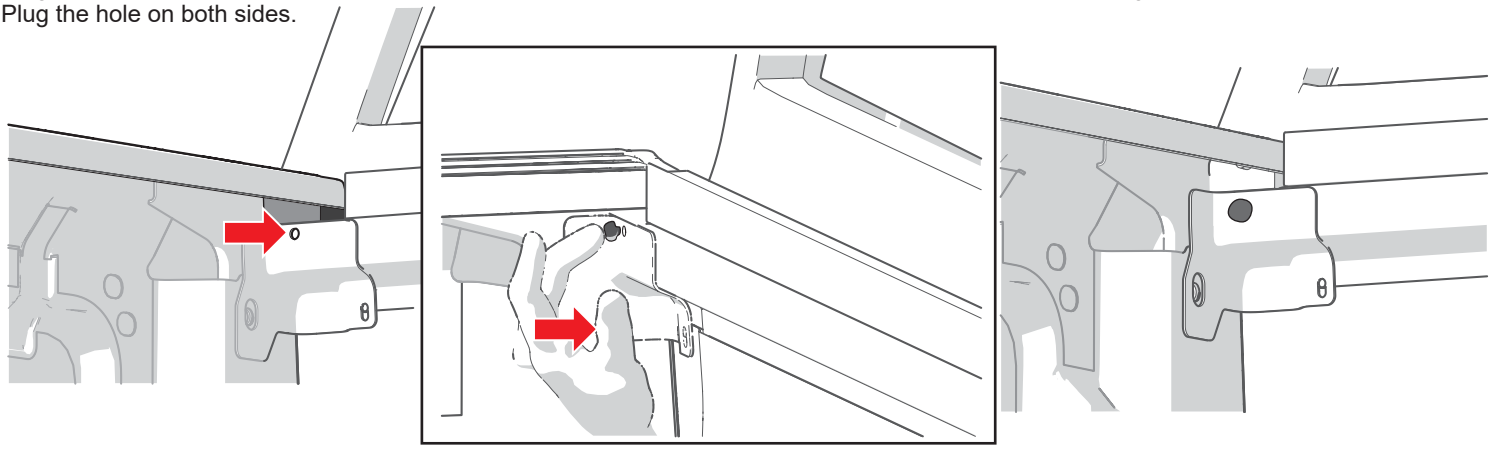

Once this step is complete, continue with the standard instructions for the Retrax cover step 4 (pg. 3).

From STEP 5, Page 3: Install the front and rear clamps

While installing the clamps, place a shim between the truck plastic bed cap and the truck's metal bed rail. Place a shim with each clamp used.

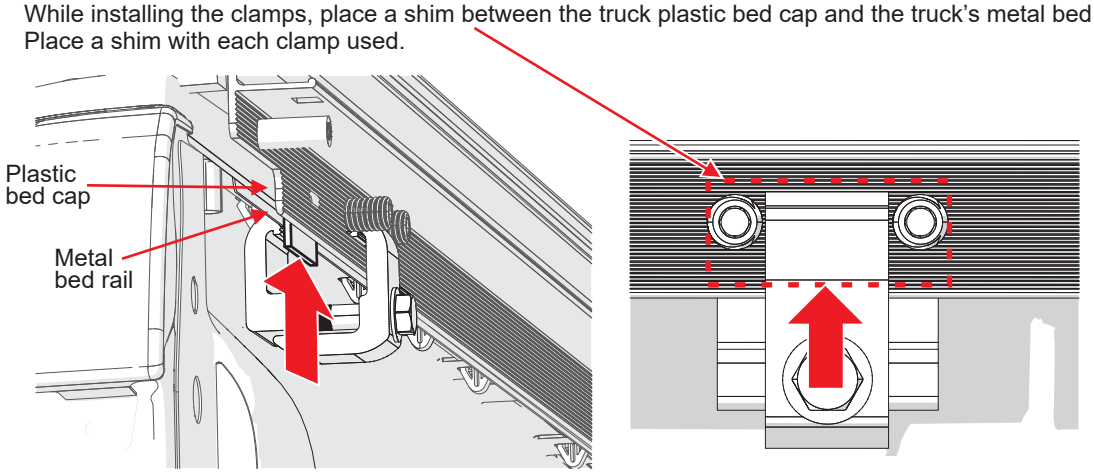

Once this step is complete, continue with the standard instructions for the Retrax cover step 6 (pg. 5).

Ensure your clamp kit includes (4) Rubber Shims
Continue with the standard instructions through step 4 (pg. 3), then return → back to this guide for step 5.

Step 5a. Insert a rubber shim between the truck plastic bed cap and the truck metal rail at each clamping location behind the adjustment screws as shown below.

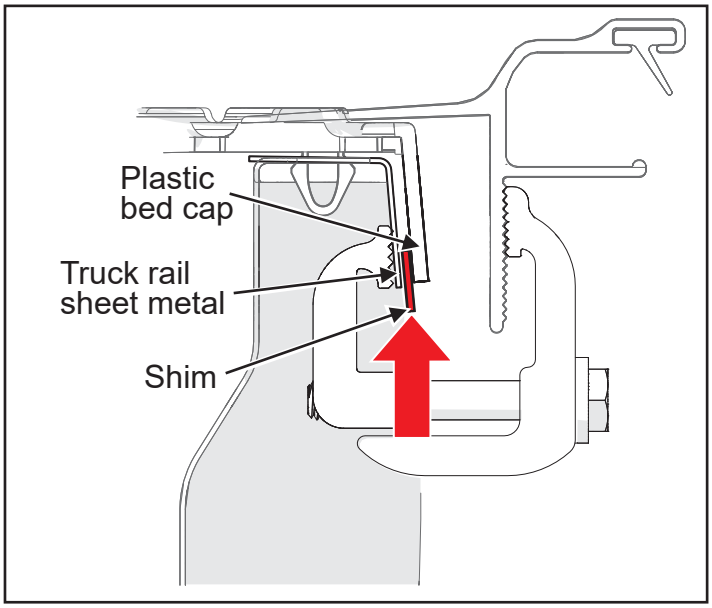

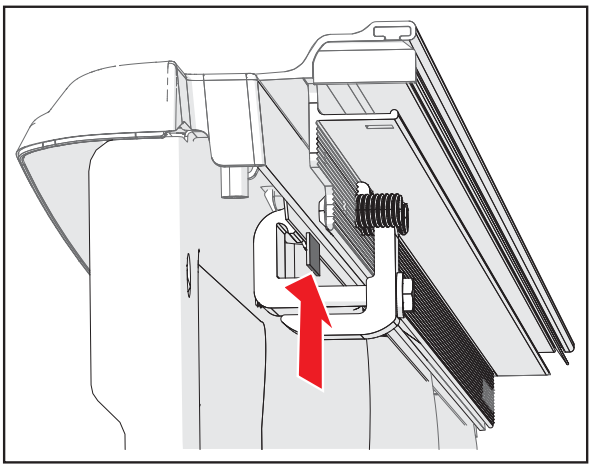

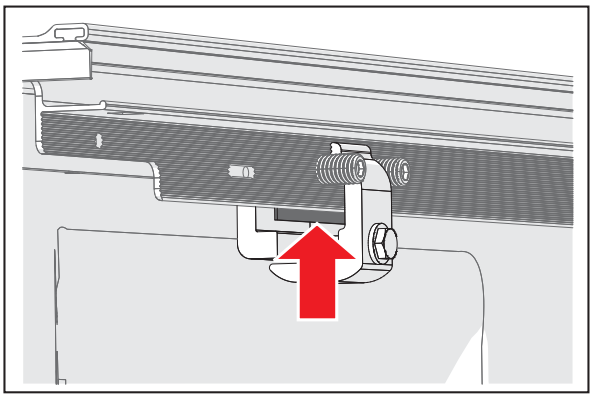

Position the clamps between the adjustment screws. Using a 9/16" or 1/2" wrench (depending on your clamps), tighten the clamps. It is important to push down on the rail while tightening, AND to tilt the rail up approximately 2 degrees simultaneously. Both the pushing down and tilting of the rail will position the rail best to minimize water intrusion.

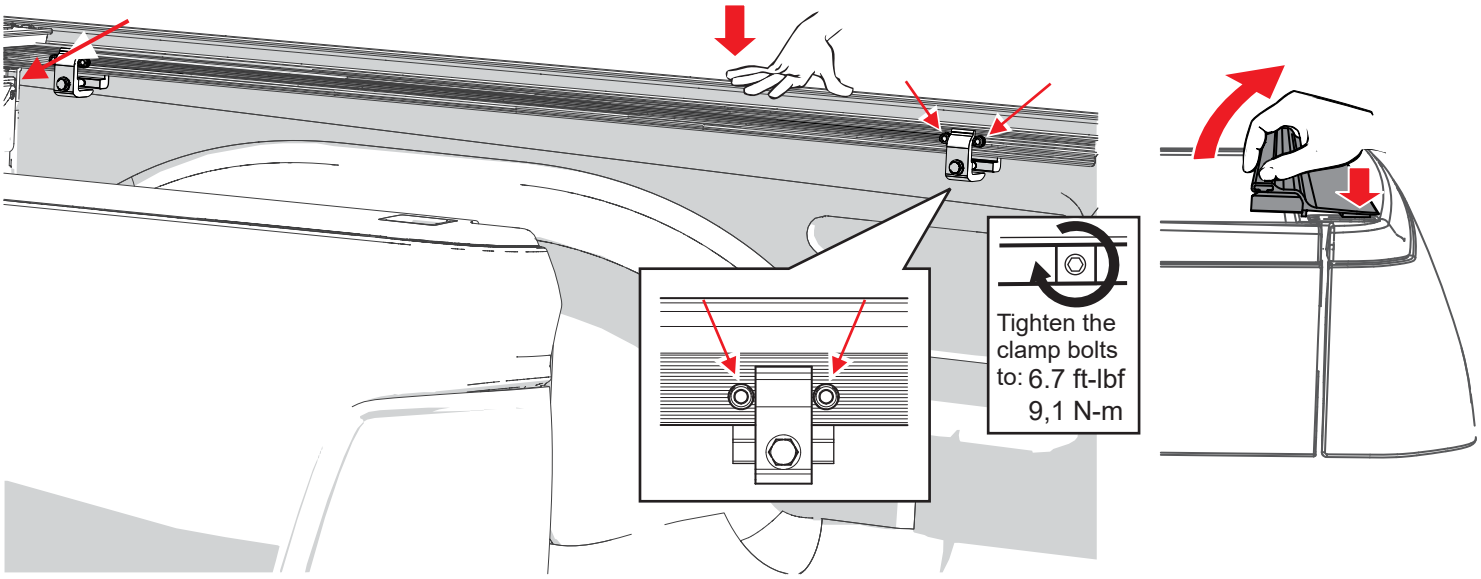

Once this step is complete, continue with the standard instructions for the RETRAX cover step 6 (Pg.5)

Nissan Navara 2021-up

Continue with the standard instructions through step 3 (pg. 2), then return → back to this page.

Adhesive backed foam seal included. Use knife or scissors to trim the seal to length when installing.

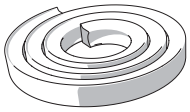

STEP 1: Clean the top of the truck bed bulkhead

Preferably use an alcohol cleaner to thoroughly clean the top of the bulkhead for better adhesion of the seal.

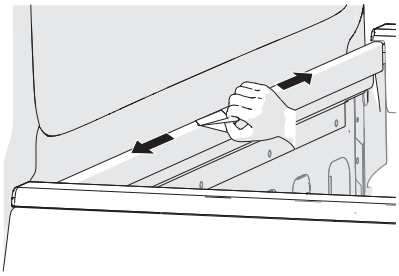

STEP 2: Adhere the bulkhead seal to the top of the truck bed bulkhead

Note the orientation of the bulkhead seal (Fig. 1). Remove some of the paper backing and adhere one end of the seal on the top of the bulkhead. Make sure to firmly push the end of the seal tight up against the truck bed rail. Remove the backing paper as the seal is placed along the bulkhead.

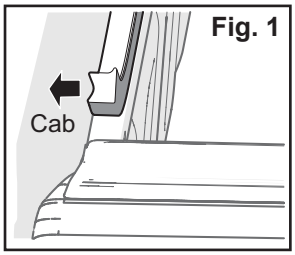

Fig. 1

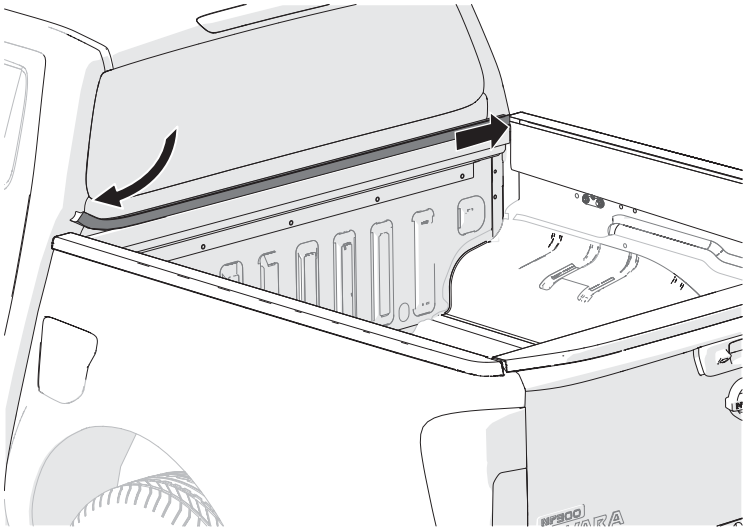

STEP 3: Trim the end of the bulkhead seal

Before the end of the seal is adhered trim the seal to fit tightly against the opposite bed rail. Finish removing the paper and adhering the seal.

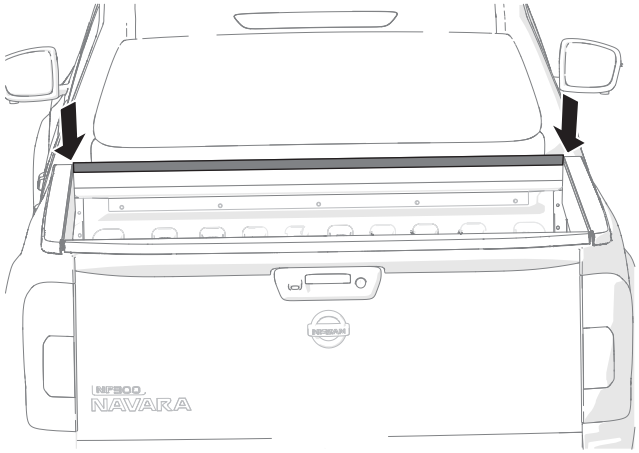

← Once this step is complete, continue with the standard instructions for the Retrax cover step 4 (pg. 3).

Retrax Warranty Statement

Retrax (referred to as manufacturer) warrants each new Retrax retractable pickup bed cover to the original owner (nontransferable) as follows:

RetraxONE MX, RetraxONE XR, PowertraxONE MX, and PowertraxPRO MX have a limited lifetime warranty for the failure of materials and workmanship. Warranty replacement costs will be prorated after one (1) year for the RetraxONE MX, and three (3) years for the PowertraxONE MX, PowertraxONE XR, PowertraxPRO MX and PowertraxPRO XR.

The RetraxPRO XR and RetraxPRO MX feature the Legendary Lifetime Warranty for the failure of materials and workmanship. Warranty replacements will be issued at no cost for the life of the cover to the original owner.

Items not covered under the warranty

- Normal wear over the life of the Retrax cover.
- Water intrusion at any location or any damage caused as a result.
- Other dealer and/or purchaser installed parts and accessories.
- Acts of God or other external causes.

Refer to the rack system's owner's guide for rack system warranty.

Conditions that will void all warranty

- Lubrication of the rails or sealed ball bearings.
- Altering the Retrax cover in any manner without written approval from the manufacturer.
- Use for any purpose other than the normal intended use.
- Misuse, negligence or accident.
- Installation of any other part or accessory that comes in contact with, or may interfere with, the Retrax cover without written approval of the manufacturer.
- Failure to register this warranty with the manufacturer within thirty (30) days from the date of delivery.
- Failure to adequately secure cargo to prevent damage to the Retrax cover.

Conditions and Limitations

This warranty is subject to certain conditions and limitations including, but not limited to, the following:

- Any part of a Retrax retractable pickup bed cover that is found to be defective under the terms of this warranty will be repaired or replaced, using either new or reconditioned parts, at the discretion of the manufacturer.
- In determining what constitutes a failure under the terms of this warranty, the decision of the manufacturer will be final.
- This warranty is applicable to the original purchaser only and is not transferrable to subsequent purchasers.
- The manufacturer does not accept any responsibility in connection with the installation of any of its products by its dealers or agents.
- Without regard to an alleged defect of its products, the manufacturer does not, under any circumstances, assume responsibility for inconvenience, loss of time, revenue or other consequential damage including, but not limited to, expenses for telephone, food, lodging, travel, loss or damage to the vehicle the products are installed on or loss or damage to personal property of the purchaser or user of the products.
- The manufacturer does not undertake responsibility to any purchaser for warranty expressed or implied by any of its dealers, distributors or agents beyond what is contained herein.
- The manufacturer reserves the right to make changes in the design of, improvements to, or warranty of its products without imposing any obligation upon itself to provide the same for any products theretofore manufactured.
- Under no circumstances shall Retrax be liable for special, indirect, incidental or consequential damages sustained in connection with the Retrax model covers.
- Some states do not allow limitations on how long the implied warranty lasts, so aforementioned limitations may not apply to you.

Helpful Hints For Keeping Your Cover Looking And Working Like New

The Retrax bed cover should slide open and closed easily. Do not force the cover open or closed. Please call Retrax (800) 206-4070 before attempting any maintenance or repairs.

Care should be taken when setting any items on the cover. If the cover is dusty or an item is dragged across the cover, scratching or hazing may occur. Treat your Retrax bed cover like the hood of your pickup. Do not wipe dust off the cover; it should be washed off.

With proper care, the polycarbonate cover will last for many years. It should be cleaned with mild soap and water. Do not use any strong chemicals or cleaners of any kind. Do not allow gasoline to come in contact with the cover.

Every effort has been made to make the Retrax covers weathertight; however, the Retrax covers are not waterproof. Use extra care to prevent damage to items during severe weather conditions or while entering a car wash. Water may collect on the cover; remove water before opening.

Do not force your Retrax cover open if ice forms on your bed cover after an ice storm or car wash. You should use your hand to tap around the perimeter of the cover, which should free up the weatherstripping that seals the bed cover along the edges.

Lock de-icer can be used to free up the key lock. Do not allow de-icer to make contact with the bed cover. Dry graphite can be applied to the lock assembly to help prevent freezing.

Claim Procedure

If a part fails, the purchaser should return to the selling dealer to determine if the failed part is covered under the terms of this warranty. If a warranty claim is necessary, the dealer will contact Retrax. If it is impractical for the purchaser to return to the selling dealer, then the purchaser may contact Retrax directly at (800) 206-4070. The defective part, along with a copy of the original bill of sale, must be returned prepaid to Retrax at 5400 32nd Ave. S, Grand Forks, ND 58201. At the manufacturer's discretion, photos, a copy of the original bill of sale and the serial number may be submitted in lieu of the returned damaged product to Retrax. After determining the validity of the warranty claim, Retrax will ship a replacement part prepaid to the customer. Labor costs to replace defective parts are the responsibility of the purchaser. If at any time you need warranty assistance, please call (800) 206-4070 or email us at retrax@retrax.com, and one of our technical reps will be happy to help you. When calling or emailing, please be prepared to reference your part number and serial number.

The serial number label is located under the cover next to the lock assembly on the tailgate extrusion. The serial number is 8 - 14 digits and may or may not include a letter in it.

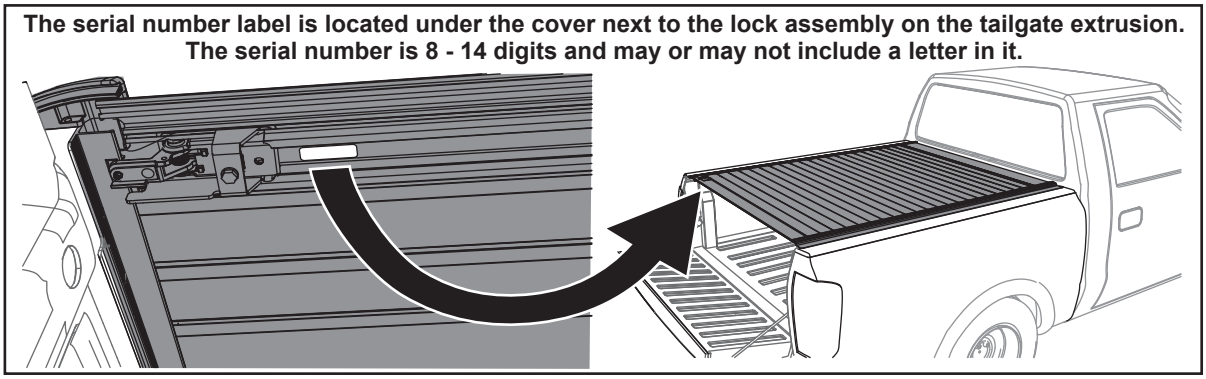

This page intentionally left blank.

RETRAX
RETRACTABLE BED COVERS

917 S. 46th St.
Grand Forks, ND 58201
P: (701) 746-5596 F: 746-5598
www.retrax.com
retrax@retrax.com
1-800-206-4070

NORTH DAKOTA MADE